## BEARING SECTION

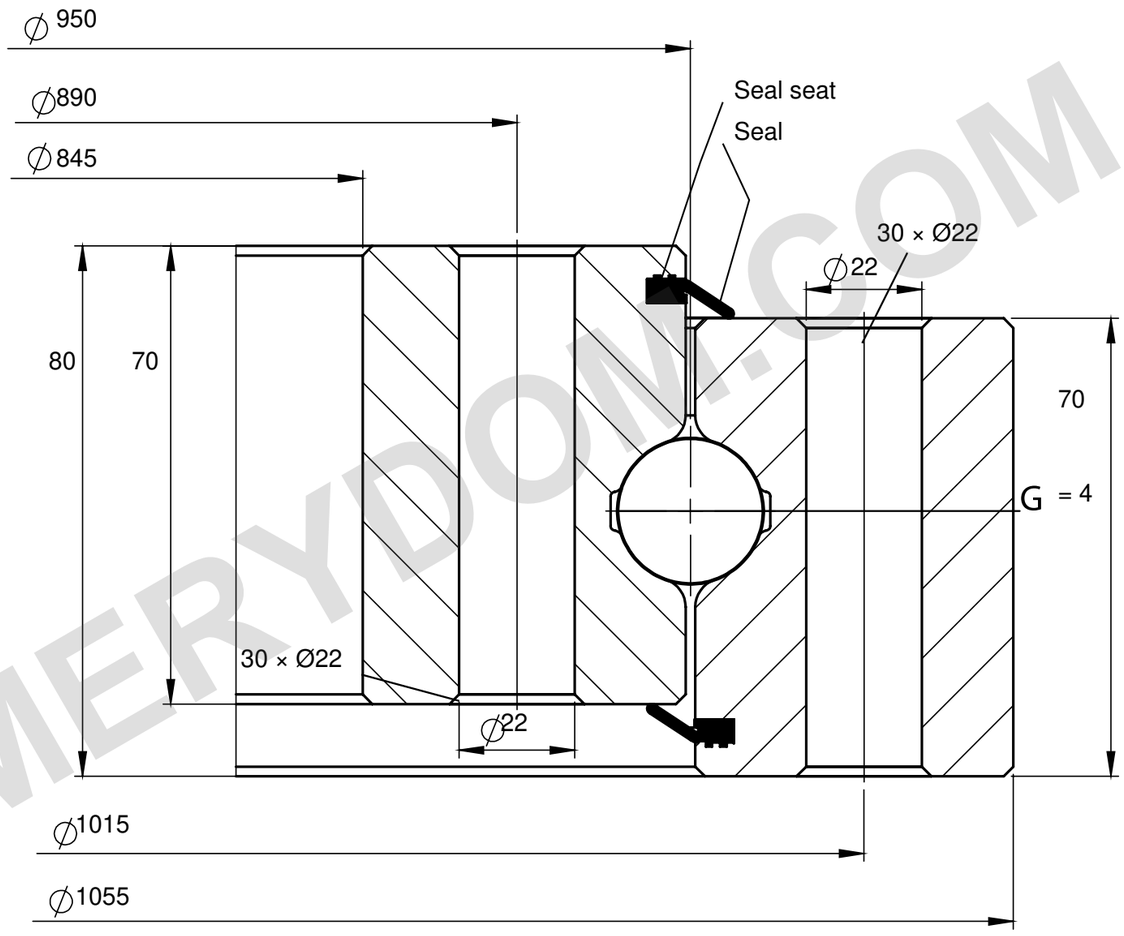


## LOAD CAPACITY

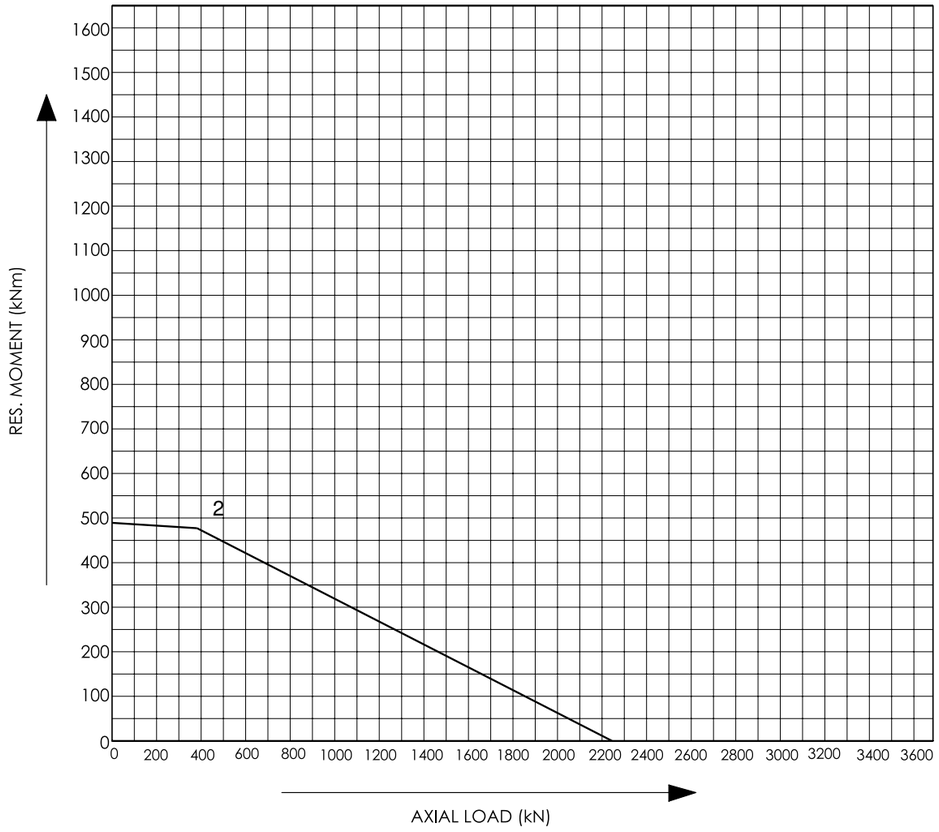


MERYDOM.COM

### REFERENCE NOTES

Dimensions in mm. Reference drawing; do not scale.

Source: Tibet Makina, 2015 catalogue, p37; curve 2.

Hole spacing not specified.

Tibet Makina 0950R-12B-100 — Product page | MERYDOM

| |
|---|
| **MERYDOM** |
| Single-row four-point contact ball |
| **0950R-12B-100** |
| REFERENCE: Tibet Makina / FOUR_POINT_UNGEARED |
| REV 1 \| NTS \| mm \| Sheet 1/1 |