BEARING SECTION

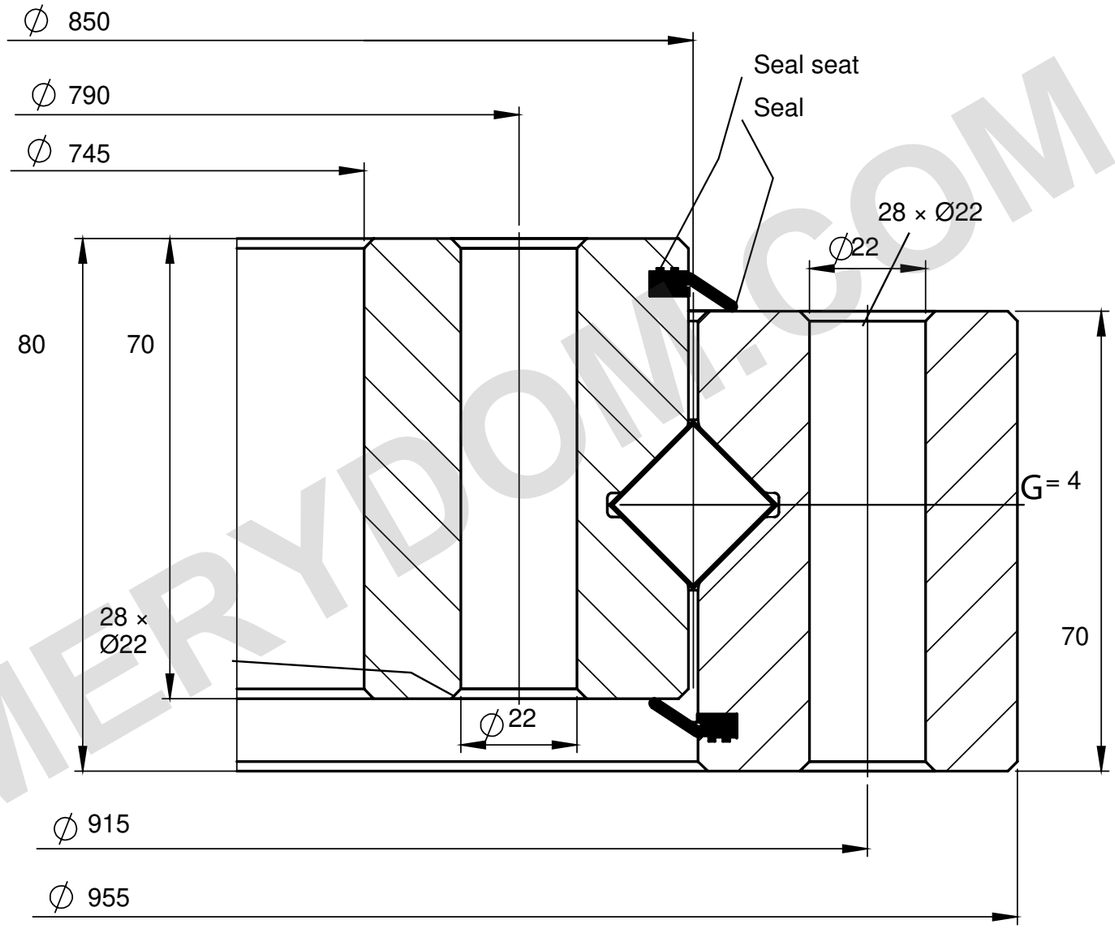

LOAD CAPACITY

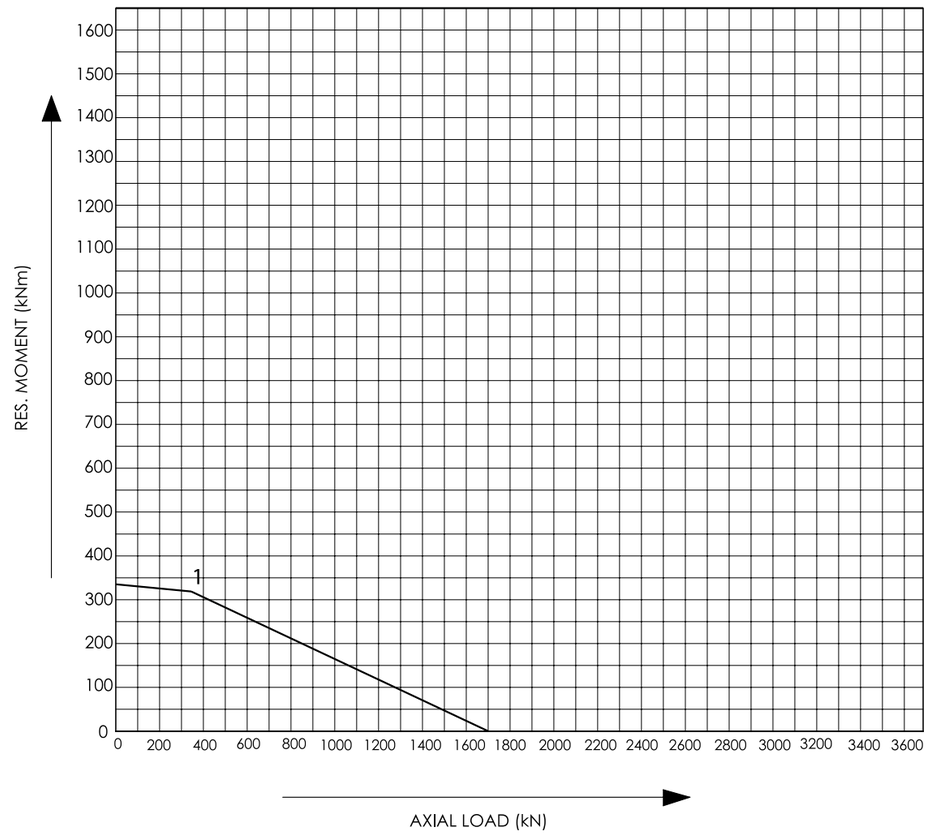

REFERENCE NOTES

Dimensions in mm. Reference drawing; do not scale.

Source: Tibet Makina, 2015 catalogue, p45; curve 1.

Hole spacing not specified.

Tibet Makina 0850R-12R-100 — Product page | MERYDOM

MERYDOM
Single-row roller slewing bearing
0850R-12R-100
REFERENCE: Tibet Makina / SINGLE_ROW_ROLLER_UNGEARED
REV 1 | NTS | mm | Sheet 1/1

MERYDOM.COM