BEARING SECTION

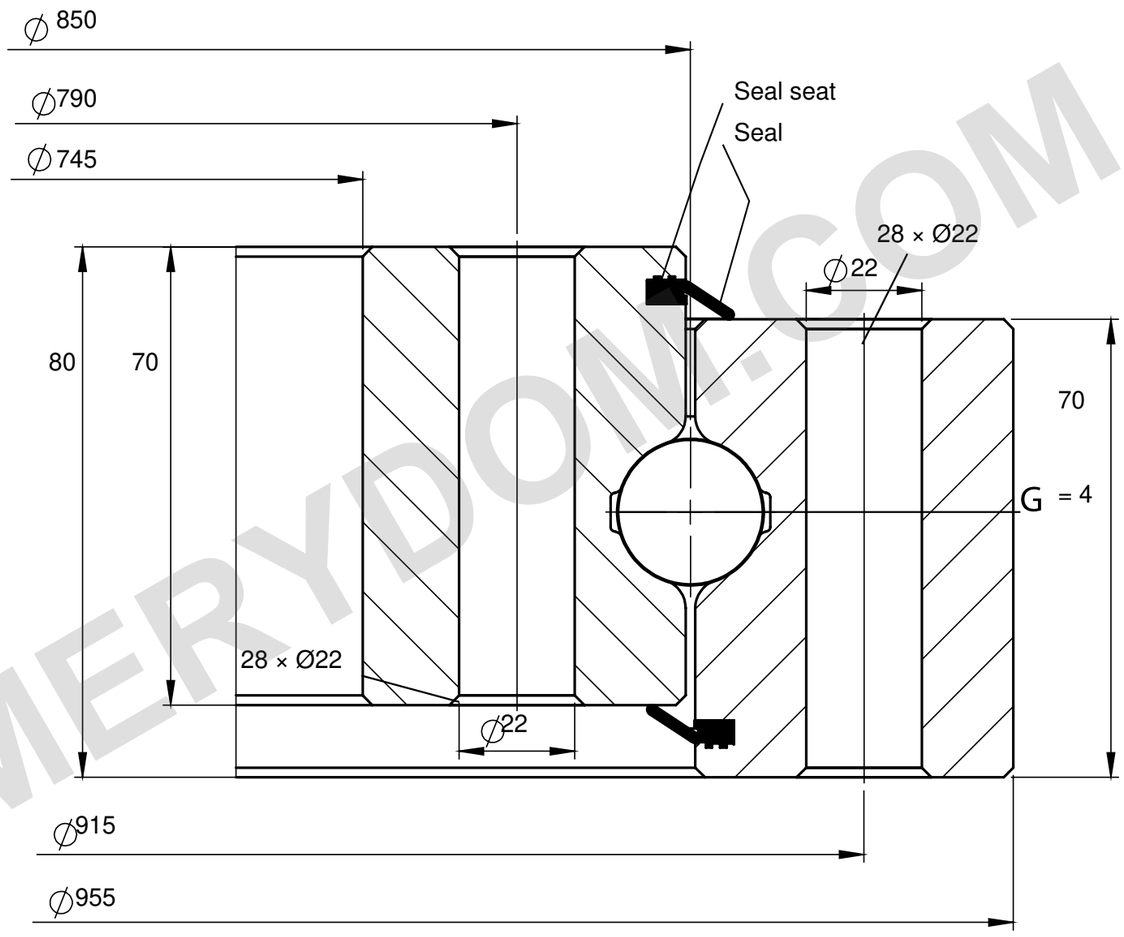

LOAD CAPACITY

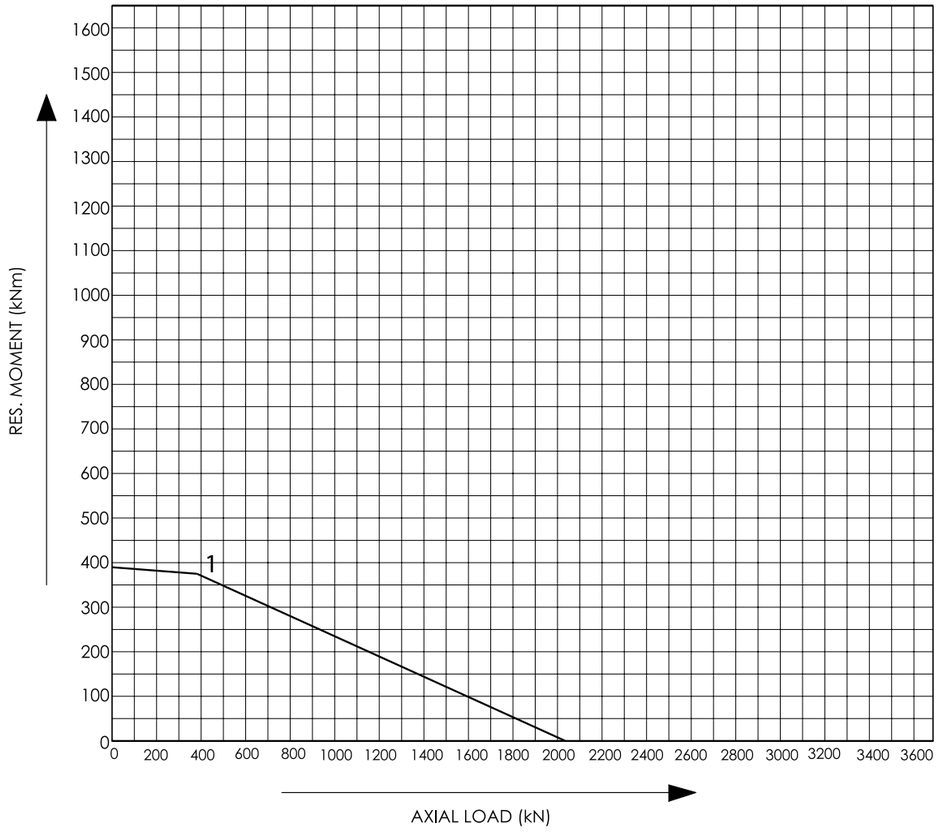

MERYDOM.COM

REFERENCE NOTES

Dimensions in mm. Reference drawing; do not scale.

Source: Tibet Makina, 2015 catalogue, p37; curve 1.

Hole spacing not specified.

Tibet Makina 0850R-12B-100 — Product page | MERYDOM

MERYDOM
Single-row four-point contact ball
0850R-12B-100
REFERENCE: Tibet Makina / FOUR_POINT_UNGEARED
REV 1 | NTS | mm | Sheet 1/1