BEARING SECTION

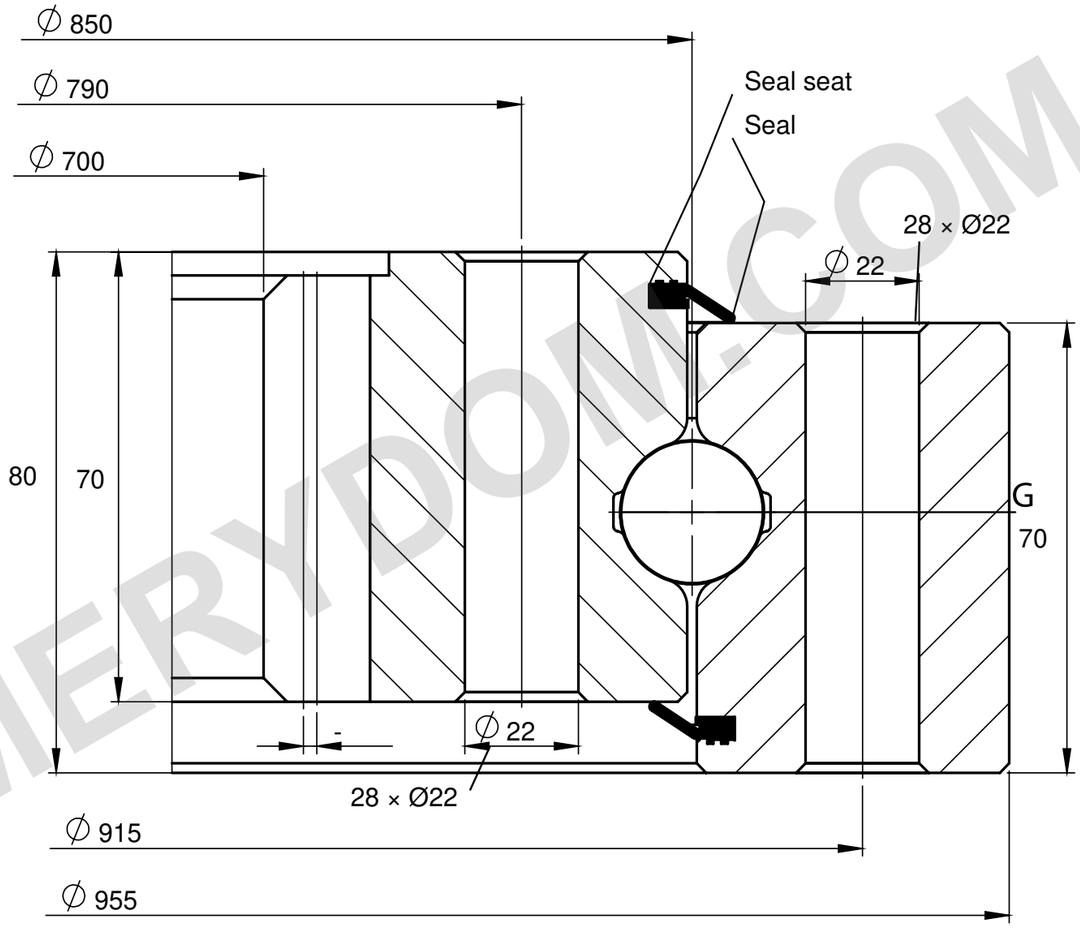

LOAD CAPACITY

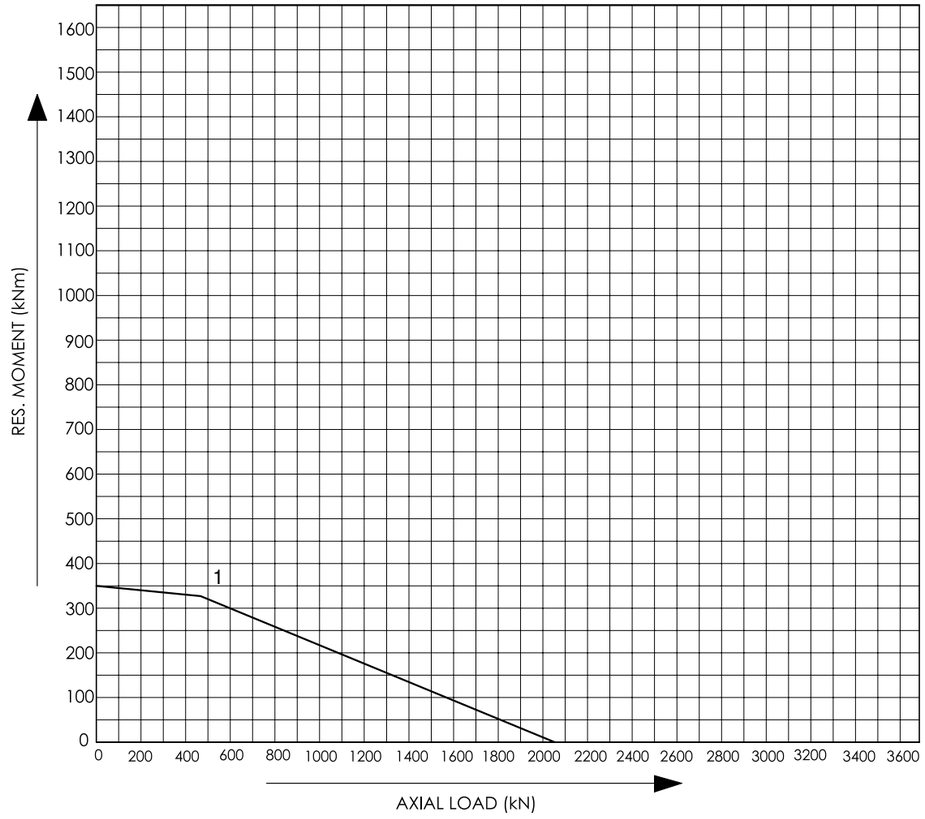

REFERENCE NOTES

Dimensions in mm. Reference drawing; do not scale.

Source: Tibet Makina, 2015 catalogue, p39; curve 1.

Hole spacing not specified. G total 4. m = 10; z = 72.

Tibet Makina 0850I-12B-100 — Product page | MERYDOM

MERYDOM
Single-row four-point contact ball
0850I-12B-100
REFERENCE: Tibet Makina / FOUR_POINT_INTERNAL
REV 1 | NTS | mm | Sheet 1/1

MERYDOM.COM