BEARING SECTION

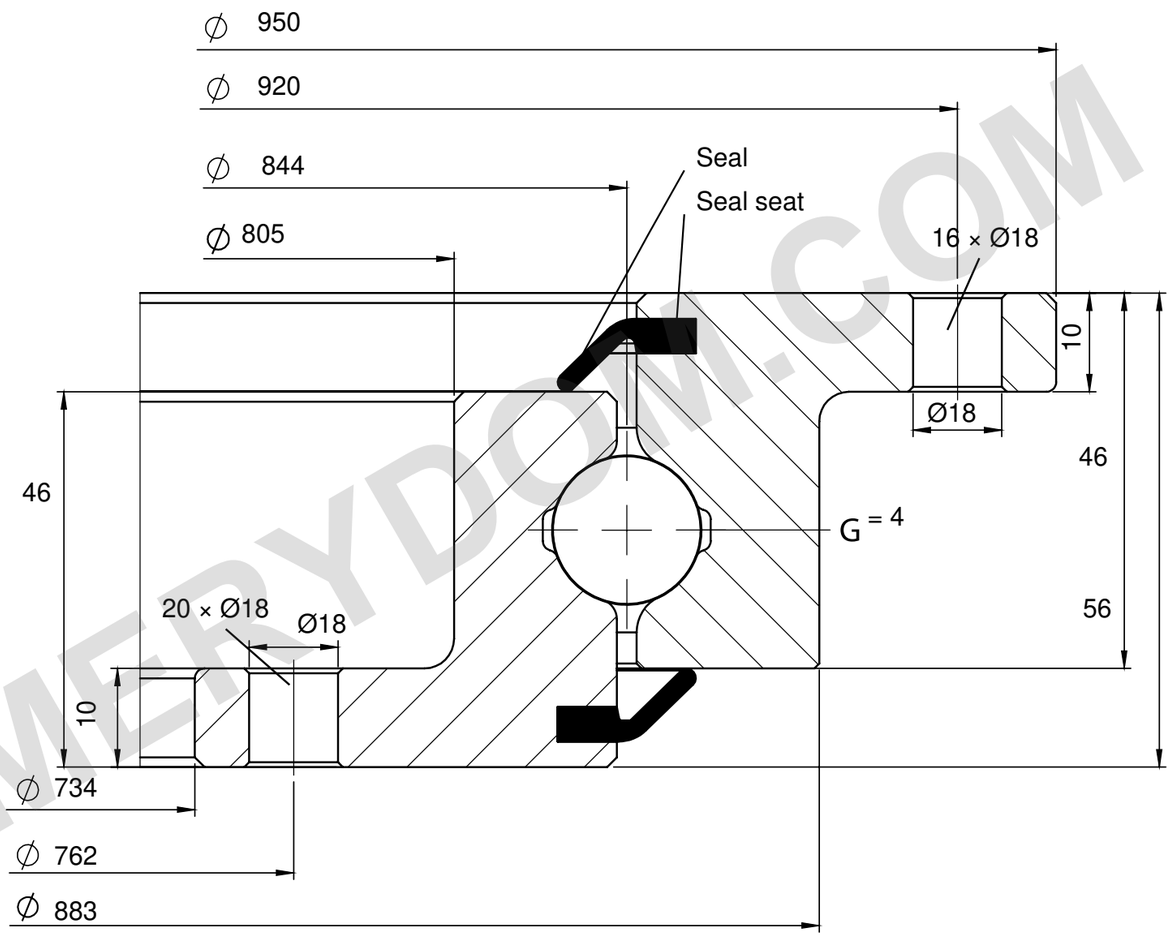

LOAD CAPACITY

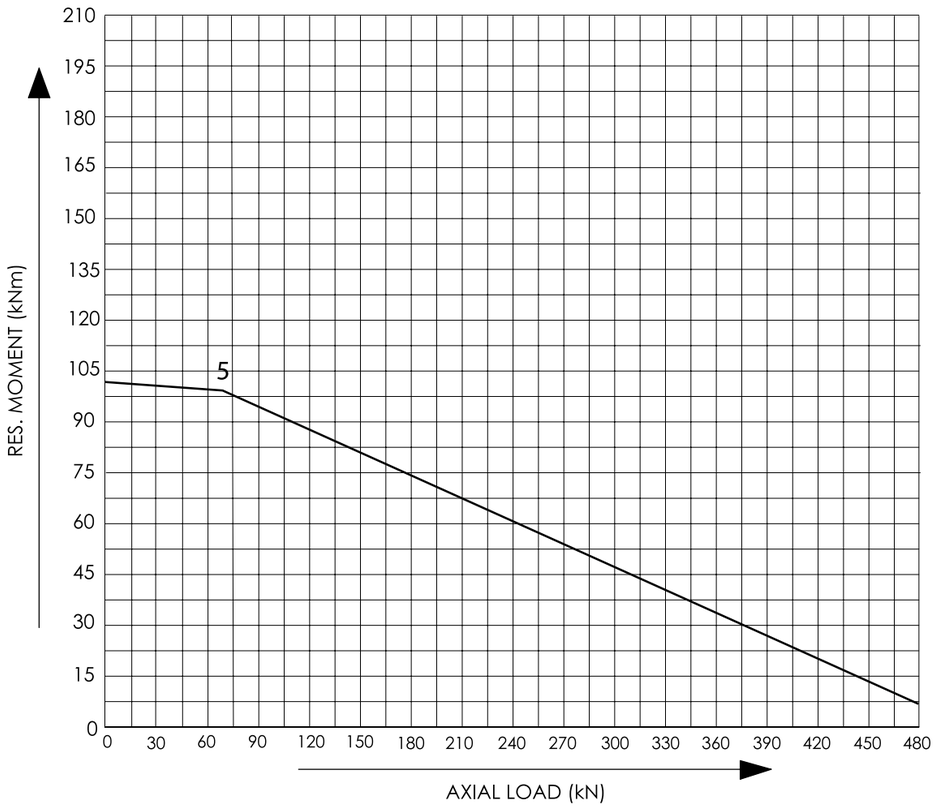

REFERENCE NOTES

Dimensions in mm. Reference drawing; do not scale.

Source: Tibet Makina, 2015 catalogue, p33; curve 5.

Hole spacing not specified.

Tibet Makina 0844R-12B-103 — Product page | MERYDOM

MERYDOM
Single-row ball bearing with flanged rings
0844R-12B-103
REFERENCE: Tibet Makina / L_UNGEARED
REV 1 | NTS | mm | Sheet 1/1

MERYDOM.COM