BEARING SECTION

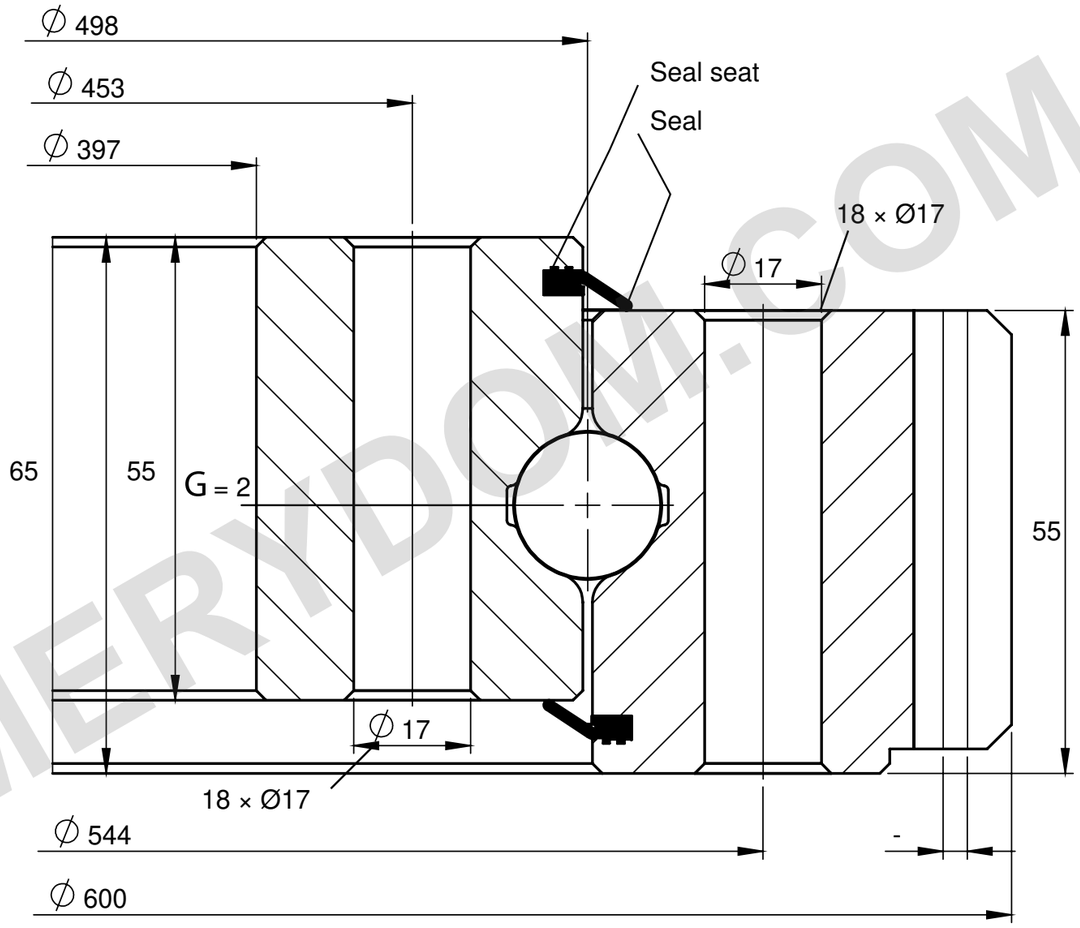

LOAD CAPACITY

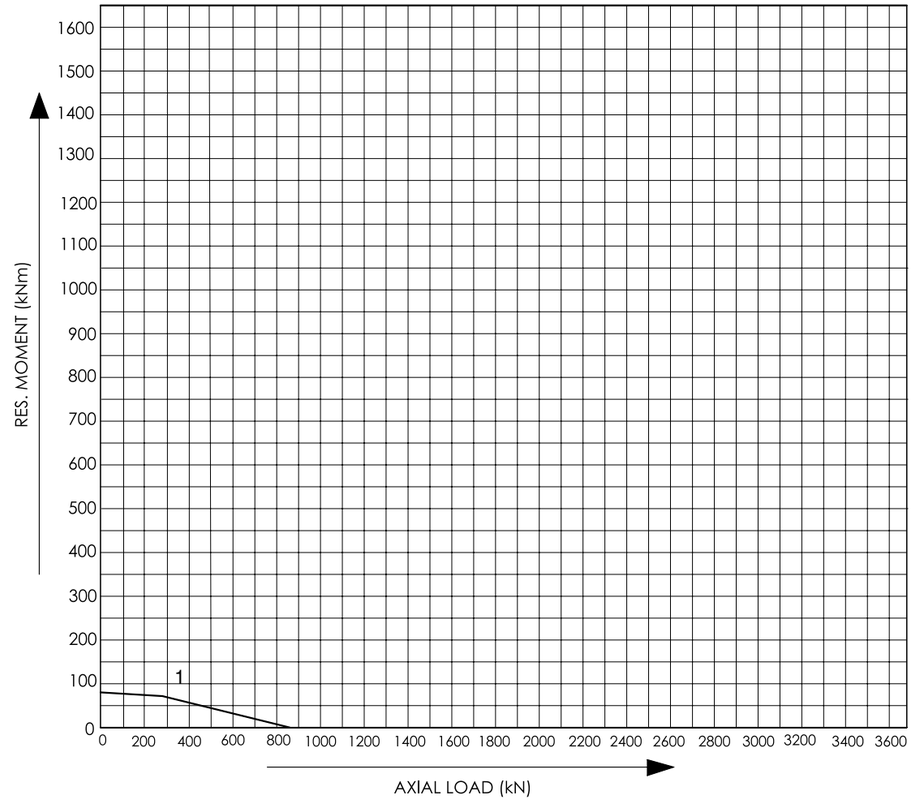

REFERENCE NOTES

Dimensions in mm. Reference drawing; do not scale.

Source: Tibet Makina, 2015 catalogue, p38; curve 1.

Hole spacing not specified. m = 5; z = 118.

Tibet Makina 0498E-01B-100 — Product page | MERYDOM

MERYDOM
Single-row four-point contact ball
0498E-01B-100
REFERENCE: Tibet Makina / FOUR_POINT_EXTERNAL
REV 1 | NTS | mm | Sheet 1/1

MERYDOM.COM