BEARING SECTION

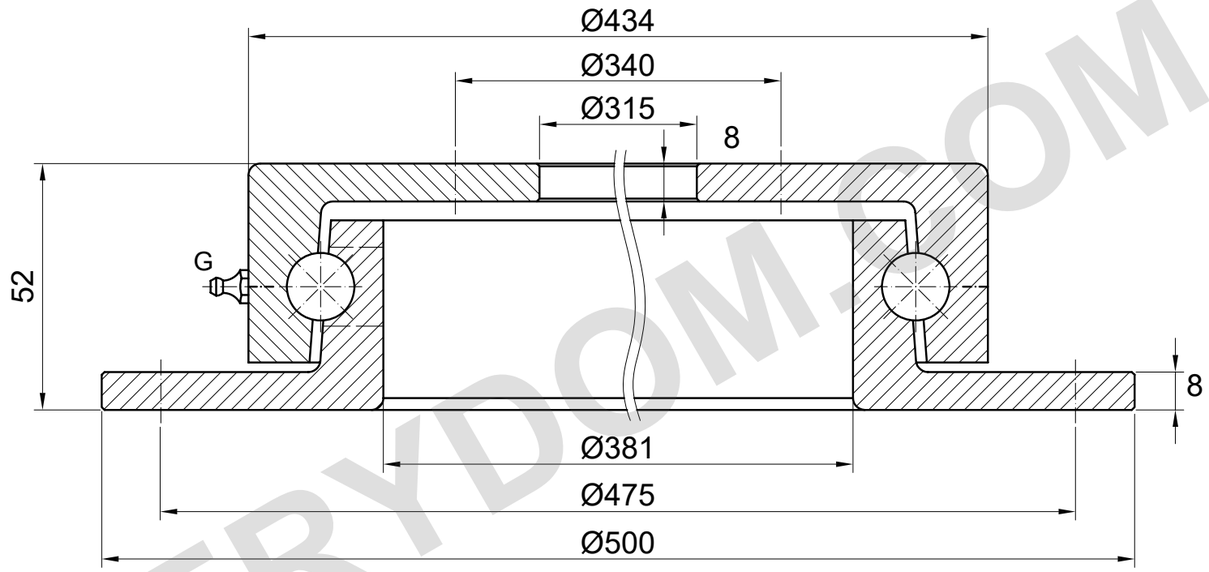

G = 1 grease nipple (location schematic); ball diameter = 14.288 mm

LOAD CAPACITY

AXIAL LOAD: 18 kN

Catalogue value for Z.500.14.

Static/dynamic basis and operating conditions are not specified on the source page.

No model-specific load curve is shown on this catalogue page.

Mounting-hole dimensions are not listed in the source table.

Not for installation or manufacture.

REFERENCE NOTES

Dimensions in mm. Reference drawing; do not scale.

Source: TGB ED.7 (2021); dimensions p33.

Mounting details and positions require confirmation.

TGB Z.500.14 — Product page | MERYDOM

MERYDOM
Single-row ball slewing bearing
Z.500.14
REFERENCE: TGB / Z.14
REFERENCE | NTS | mm | Sheet 1/1

MERYDOM.COM