BEARING SECTION

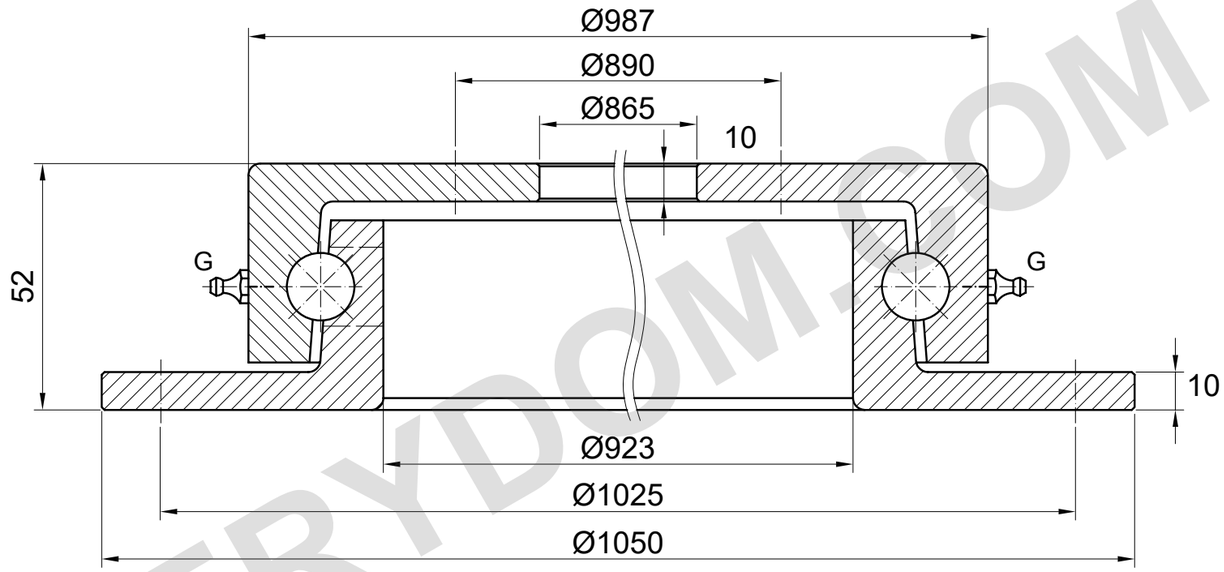

G = 4 grease nipples (locations schematic); ball diameter = 15.875 mm

LOAD CAPACITY

AXIAL LOAD: 50 kN

Catalogue value for Z.1050.16.

Static/dynamic basis and operating conditions are not specified on the source page.

No model-specific load curve is shown on this catalogue page.

Mounting-hole dimensions are not listed in the source table.

Not for installation or manufacture.

REFERENCE NOTES

Dimensions in mm. Reference drawing; do not scale.

Source: TGB ED.7 (2021); dimensions p33.

Undrilled supply; mounting-hole requirements subject to order confirmation.

TGB Z.1050.16 — Product page | MERYDOM

MERYDOM
Single-row ball slewing bearing
Z.1050.16
REFERENCE: TGB / Z.16
REFERENCE | NTS | mm | Sheet 1/1

MERYDOM.COM