BEARING SECTION

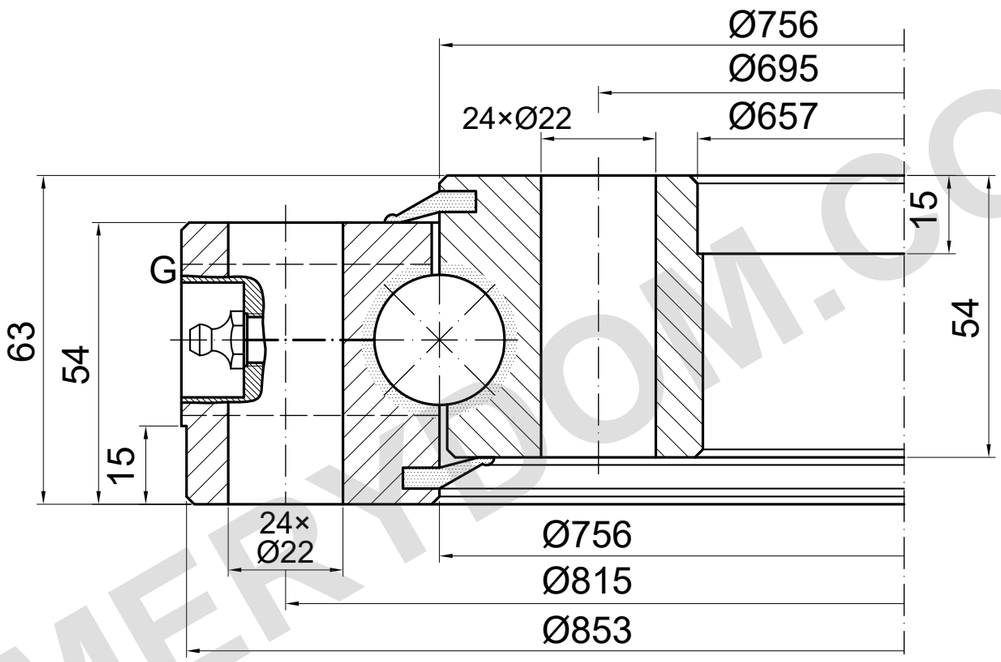

LOAD CAPACITY

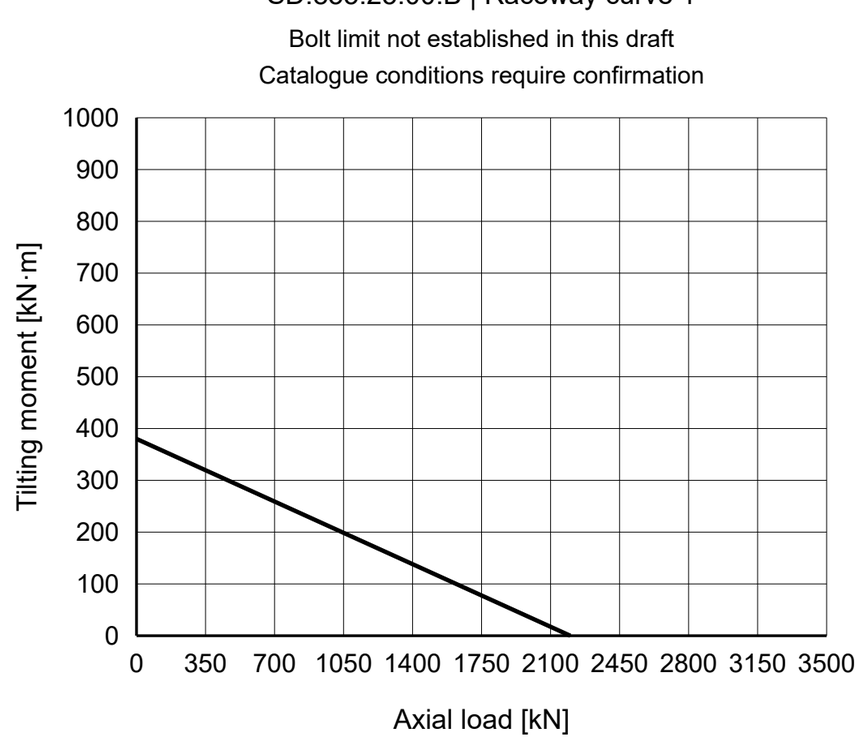

REFERENCE NOTES

Dimensions in mm. Reference drawing; do not scale.

Source: TGB ED.7 (2021); dimensions p29; load chart p29, 1.

Mounting positions and G phase require confirmation.

TGB SD.855.25.00.B — Product page | MERYDOM

MERYDOM
Single-row ball slewing bearing
SD.855.25.00.B
REFERENCE: TGB / SD.25.B
REFERENCE | NTS | mm | Sheet 1/1

MERYDOM.COM