BEARING SECTION

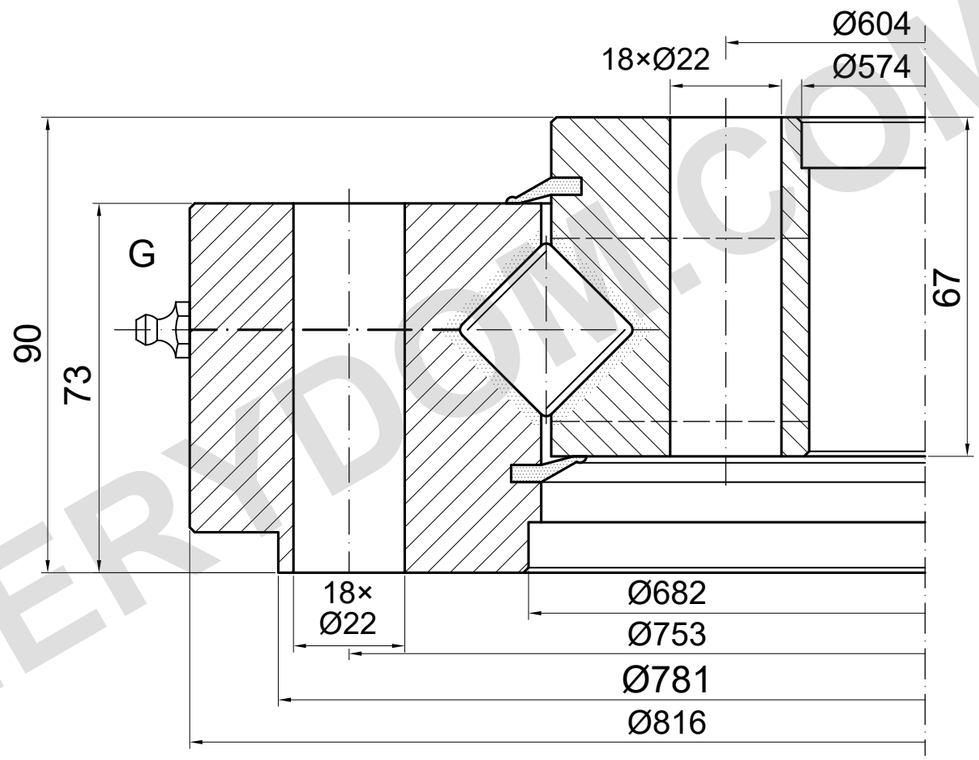

LOAD CAPACITY

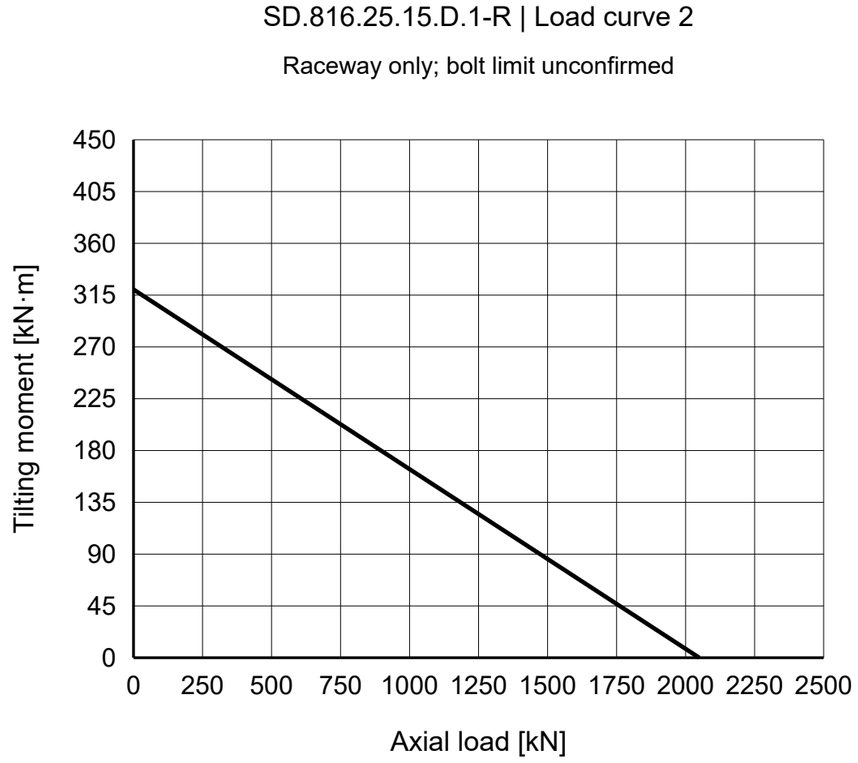

REFERENCE NOTES

Dimensions in mm. Reference drawing; do not scale.

Source: TGB ED.7 (2021); dimensions p31; load chart p31, 2.

inner Ø22 per ED.7; Matis 22.I unconfirmed. Hole positions unknown.

TGB SD.816.25.15.D.1-R — Product page | MERYDOM

TGB ED.7 catalogue reference. Confirm actual dimensions and mounting holes against the order drawing.

MERYDOM
Crossed-roller slewing bearing
SD.816.25.15.D.1-R
REFERENCE: TGB / SD.25-30.D-R
REFERENCE | NTS | mm | Sheet 1/1

MERYDOM.COM