BEARING SECTION

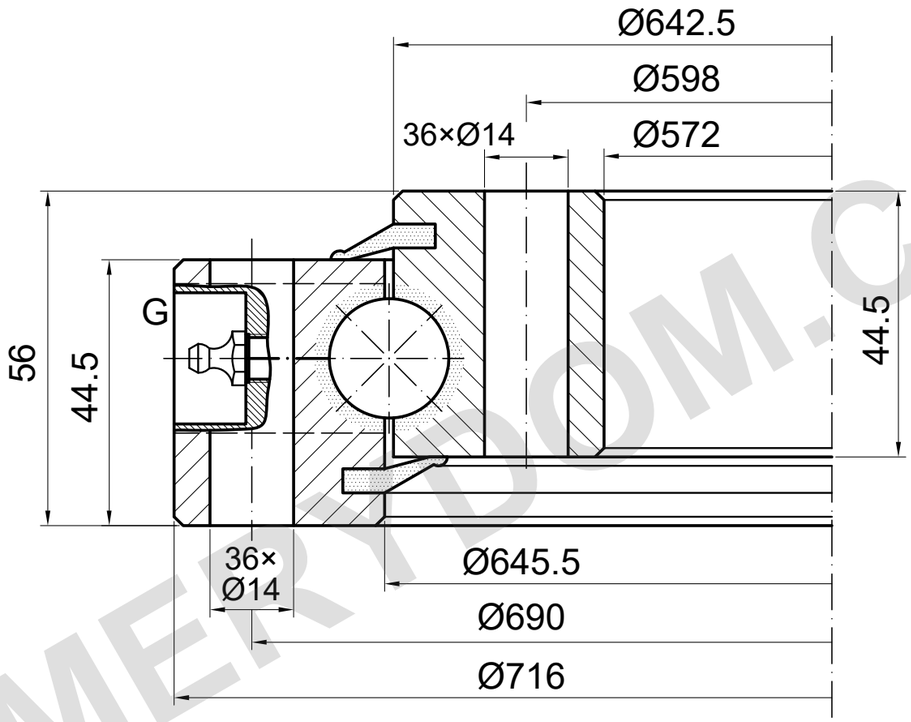

LOAD CAPACITY

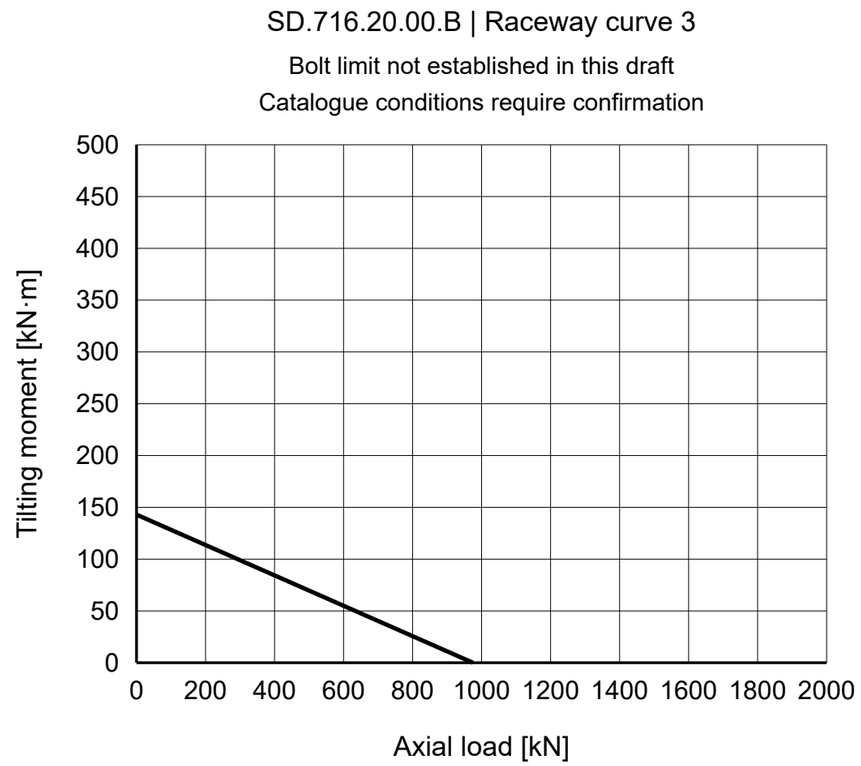

REFERENCE NOTES

Dimensions in mm. Reference drawing; do not scale.

Source: TGB ED.7 (2021); dimensions p28; load chart p28, 3.

Mounting positions and G phase require confirmation.

TGB SD.716.20.00.B — Product page | MERYDOM

MERYDOM
Single-row ball slewing bearing
SD.716.20.00.B
REFERENCE: TGB / SD.20.B
REFERENCE | NTS | mm | Sheet 1/1

MERYDOM.COM