## BEARING SECTION

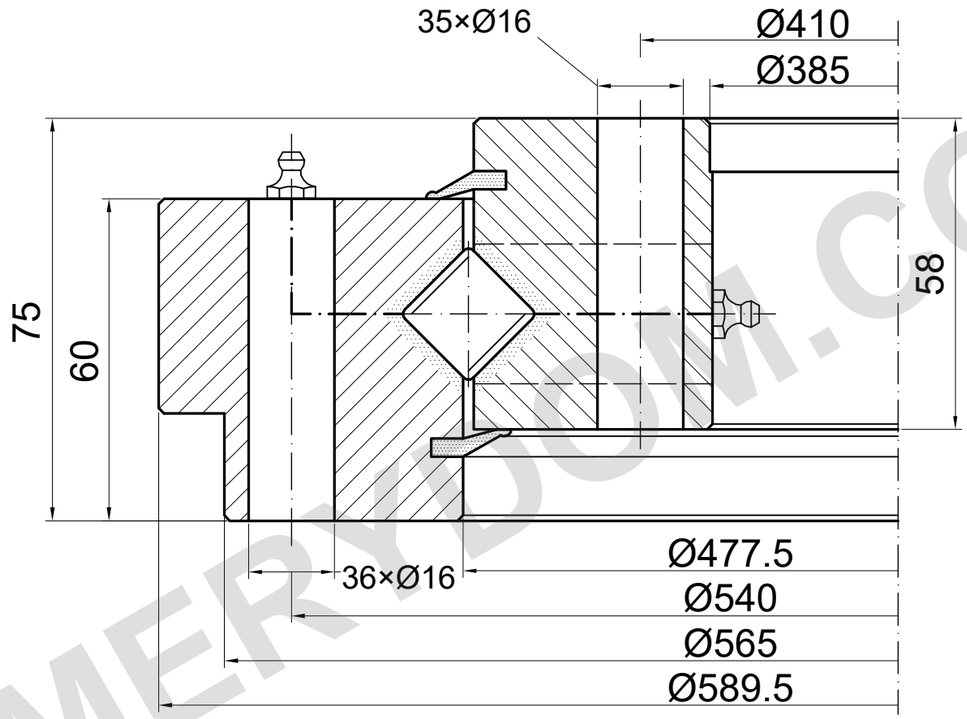


## LOAD CAPACITY

SD.589.20.15.D.1-R | Load curve 3

Catalogue curve; detailed drawing required

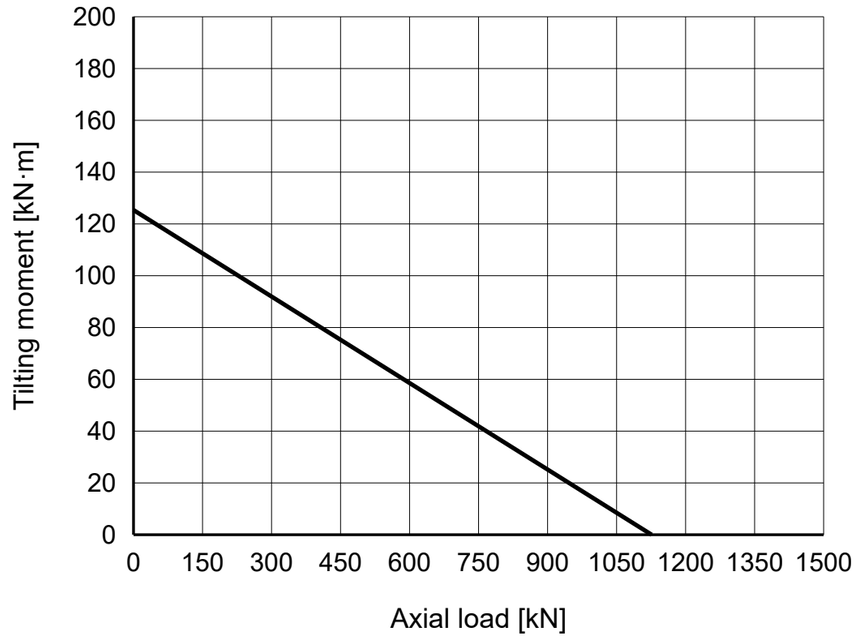


### REFERENCE NOTES

Dimensions in mm. Reference drawing; do not scale.

Source: TGB ED.7 (2021); dimensions p31; load chart p31, 3.

Catalogue 36−1; omitted position and lubrication require confirmation.

TGB SD.589.20.15.D.1-R — Product page | MERYDOM

| |
|---|
| **MERYDOM** |
| Crossed-roller slewing bearing |
| **SD.589.20.15.D.1-R** |
| REFERENCE: TGB / SD.20.D-R |
| REFERENCE \| NTS \| mm \| Sheet 1/1 |

MERYDOM.COM