BEARING SECTION

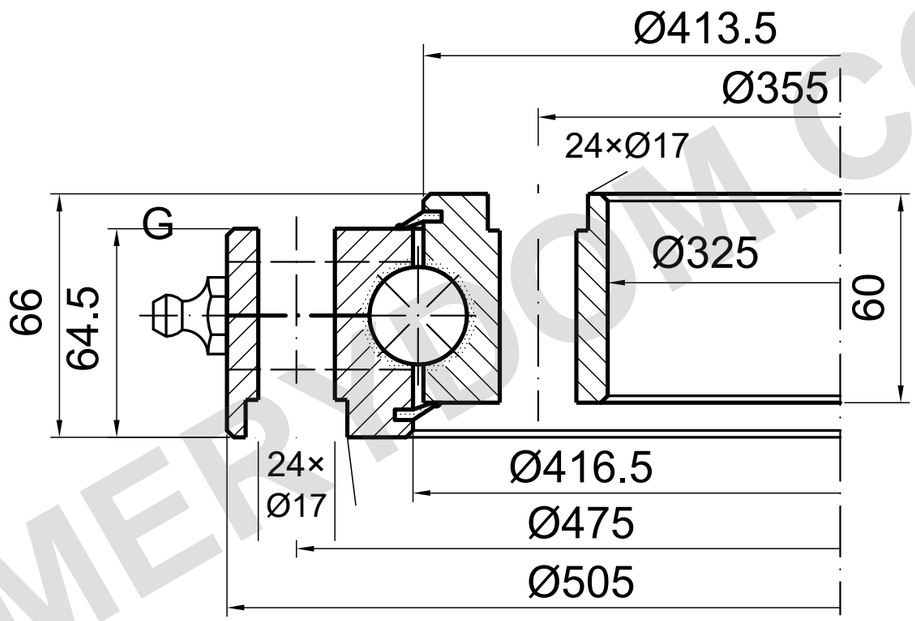

LOAD CAPACITY

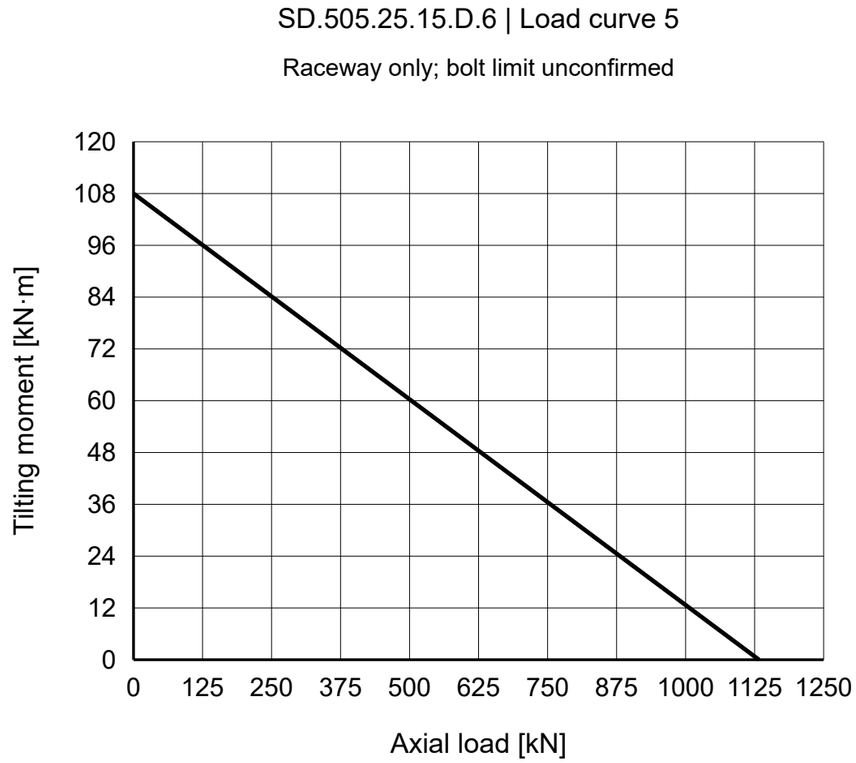

REFERENCE NOTES

Dimensions in mm. Reference drawing; do not scale.

Source: TGB ED.7 (2021); dimensions p30; load chart p30, 5.

Stepped holes schematic; Ø17 step relation, counterbore sizes, faces and lubrication unconfirmed.

TGB SD.505.25.15.D.6 — Product page | MERYDOM

MERYDOM
Single-row ball slewing bearing
SD.505.25.15.D.6
REFERENCE: TGB / SD.14-20-25.D
REFERENCE | NTS | mm | Sheet 1/1

MERYDOM.COM