BEARING SECTION

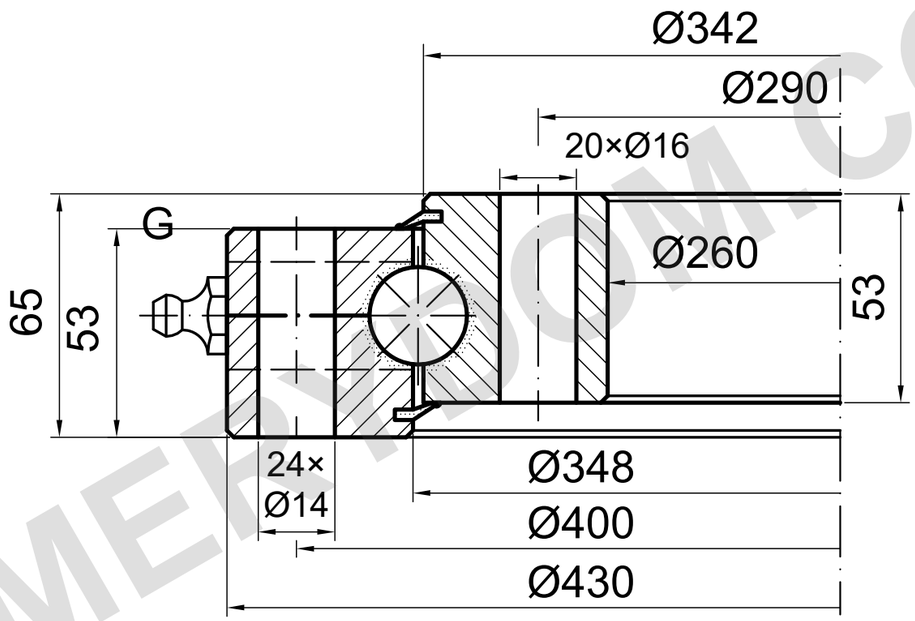

LOAD CAPACITY

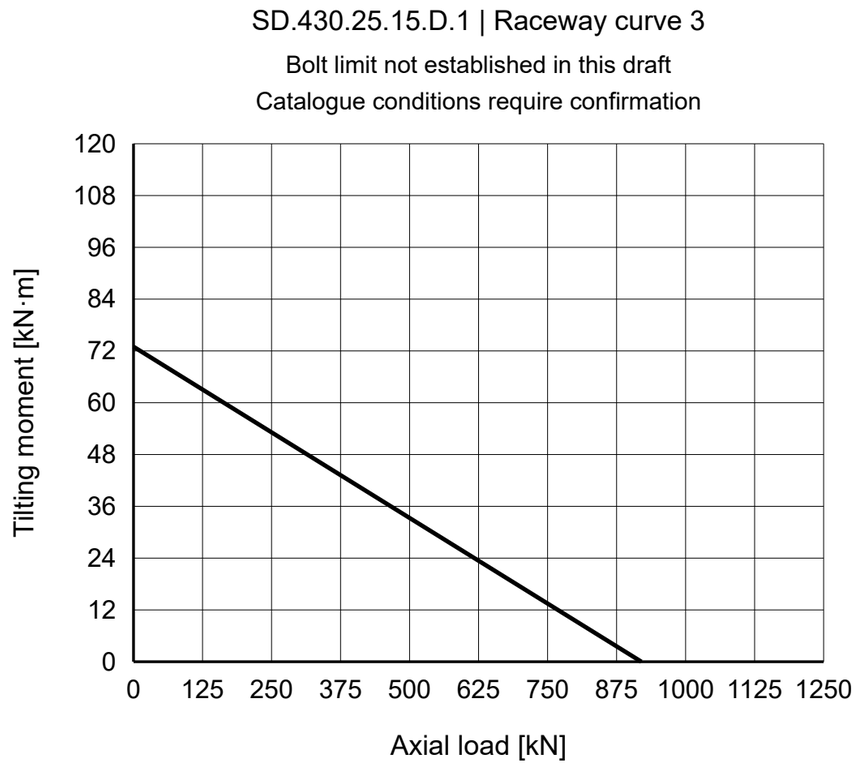

REFERENCE NOTES

Dimensions in mm. Reference drawing; do not scale.

Source: TGB ED.7 (2021); dimensions p30; load chart p30, 3.

Mounting positions and G details require confirmation.

TGB SD.430.25.15.D.1 — Product page | MERYDOM

MERYDOM
Single-row ball slewing bearing
SD.430.25.15.D.1
REFERENCE: TGB / SD.14-20-25.D
REFERENCE | NTS | mm | Sheet 1/1

MERYDOM.COM