BEARING SECTION

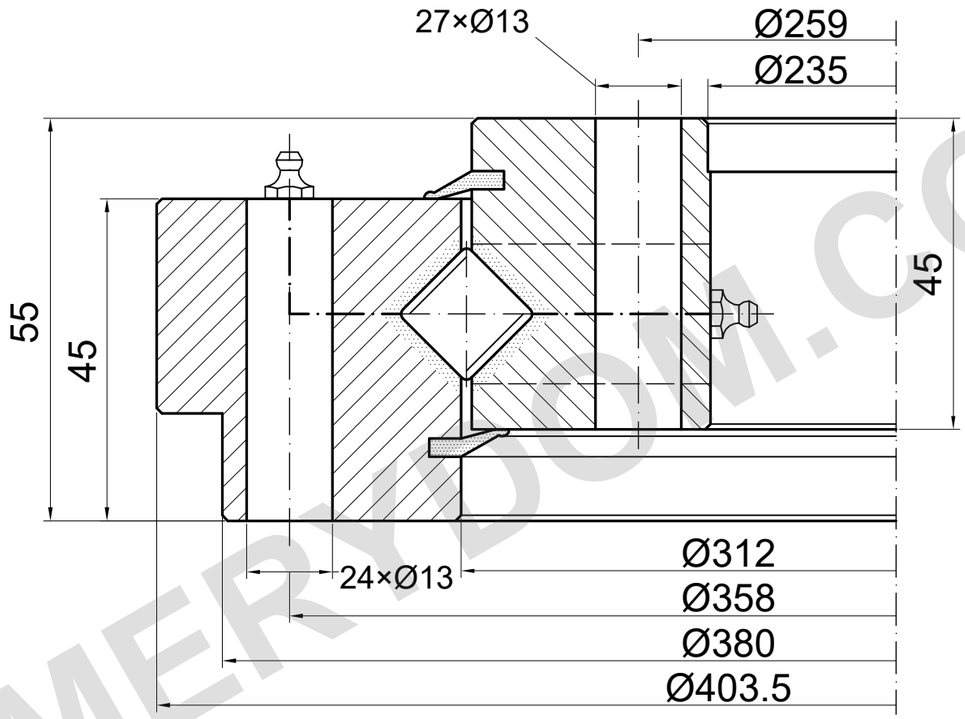

LOAD CAPACITY

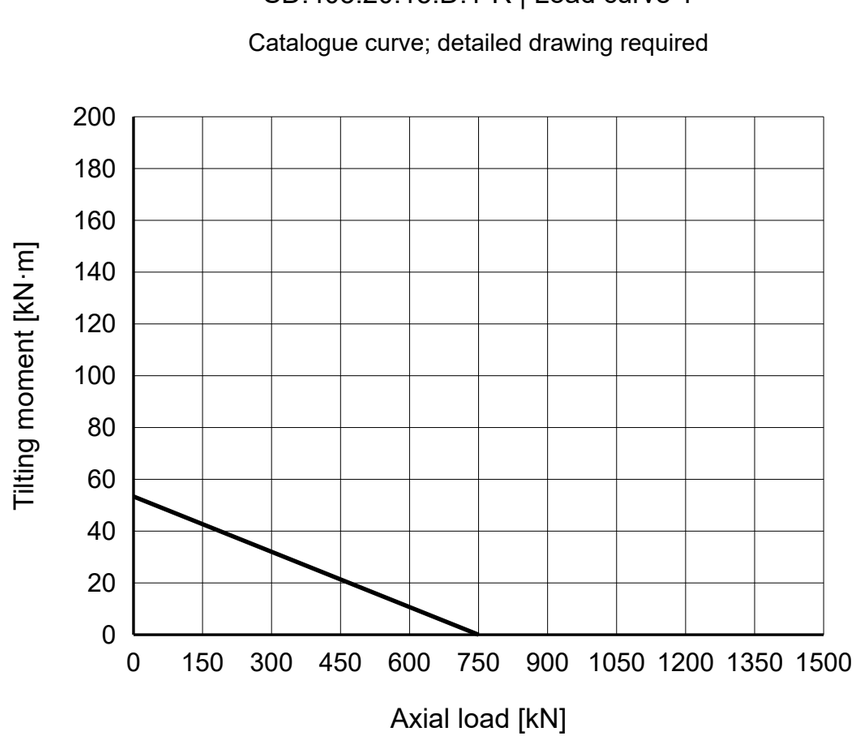

REFERENCE NOTES

Dimensions in mm. Reference drawing; do not scale.

Source: TGB ED.7 (2021); dimensions p31; load chart p31, 1.

Catalogue 28−1; omitted position and lubrication require confirmation.

TGB SD.403.20.15.D.1-R — Product page | MERYDOM

MERYDOM
Crossed-roller slewing bearing
SD.403.20.15.D.1-R
REFERENCE: TGB / SD.20.D-R
REFERENCE | NTS | mm | Sheet 1/1

MERYDOM.COM