BEARING SECTION

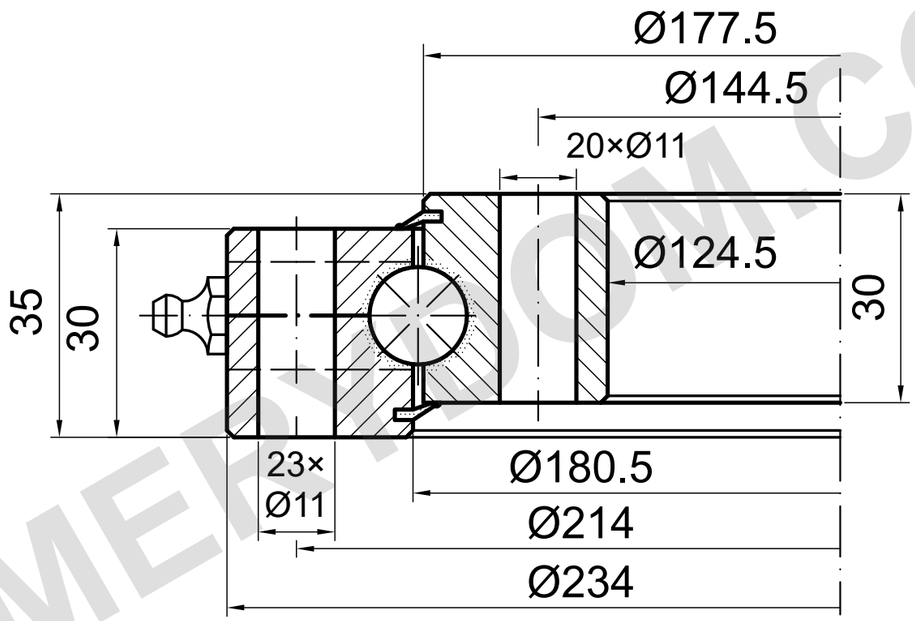

LOAD CAPACITY

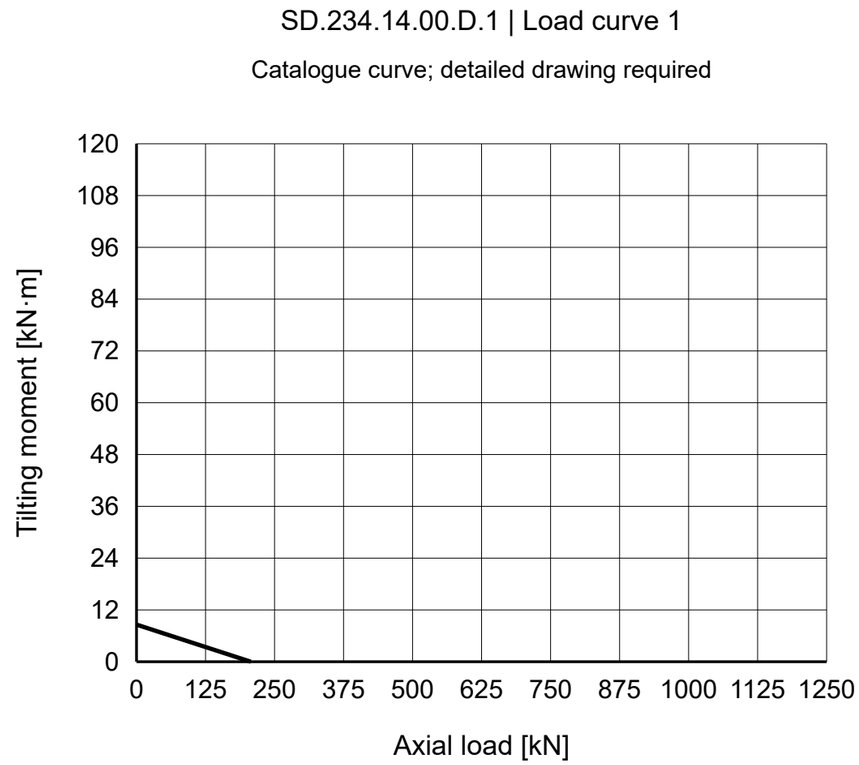

REFERENCE NOTES

Dimensions in mm. Reference drawing; do not scale.

Source: TGB ED.7 (2021); dimensions p30; load chart p30, 1.

Catalogue 24−1; omitted position and lubrication require confirmation.

TGB SD.234.14.00.D.1 — Product page | MERYDOM

MERYDOM
Single-row ball slewing bearing
SD.234.14.00.D.1
REFERENCE: TGB / SD.14-20-25.D
REFERENCE | NTS | mm | Sheet 1/1

MERYDOM.COM