BEARING SECTION

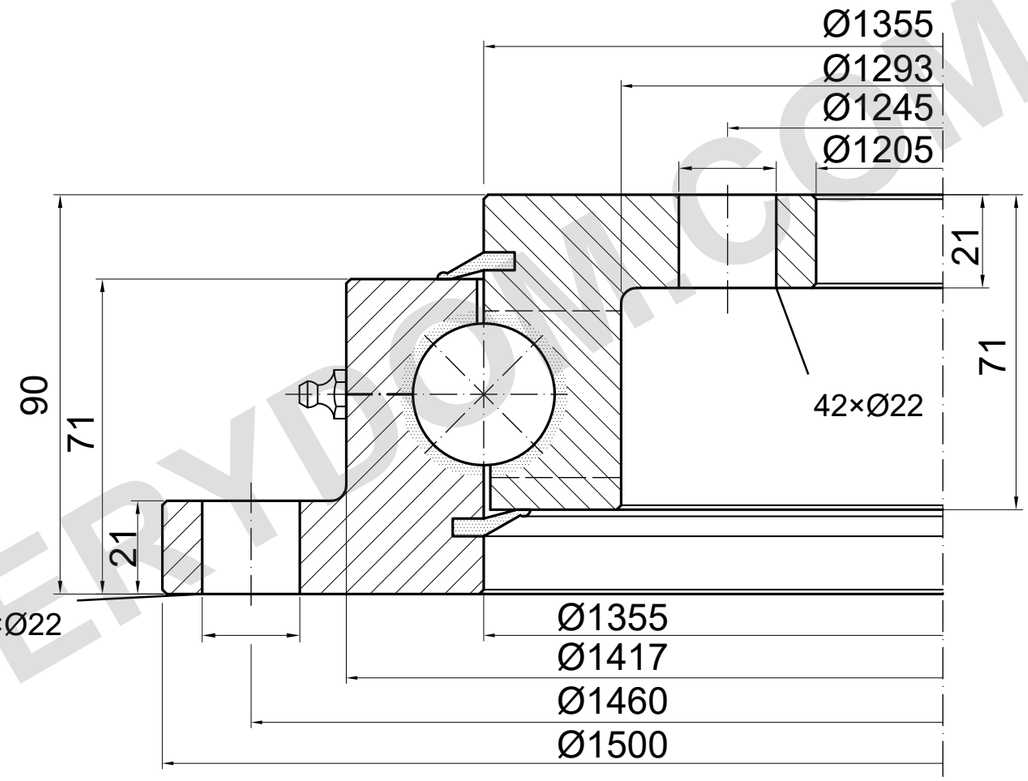

LOAD CAPACITY

LOAD CURVE NOT ESTABLISHED

ED.7 and Matis source charts differ.

Do not use as an operating limit.

ED.7: 90 / 71 / 21 and Ø22 mm.

Matis: 56 / 44.5 and Ø14 mm.

Conflicting dimensions require confirmation.

REFERENCE NOTES

Dimensions in mm. Reference drawing; do not scale.

Source: TGB ED.7 (2021); dimensions p30.

ED.7 section and Ø22 conflict with Matis; confirmation required.

TGB SD.1500.32.00.C — Product page | MERYDOM

TGB ED.7 catalogue reference. Confirm actual dimensions and mounting holes against the order drawing.

MERYDOM
Single-row ball slewing bearing
SD.1500.32.00.C
REFERENCE: TGB / SD.32.C
REFERENCE | NTS | mm | Sheet 1/1

MERYDOM.COM