BEARING SECTION

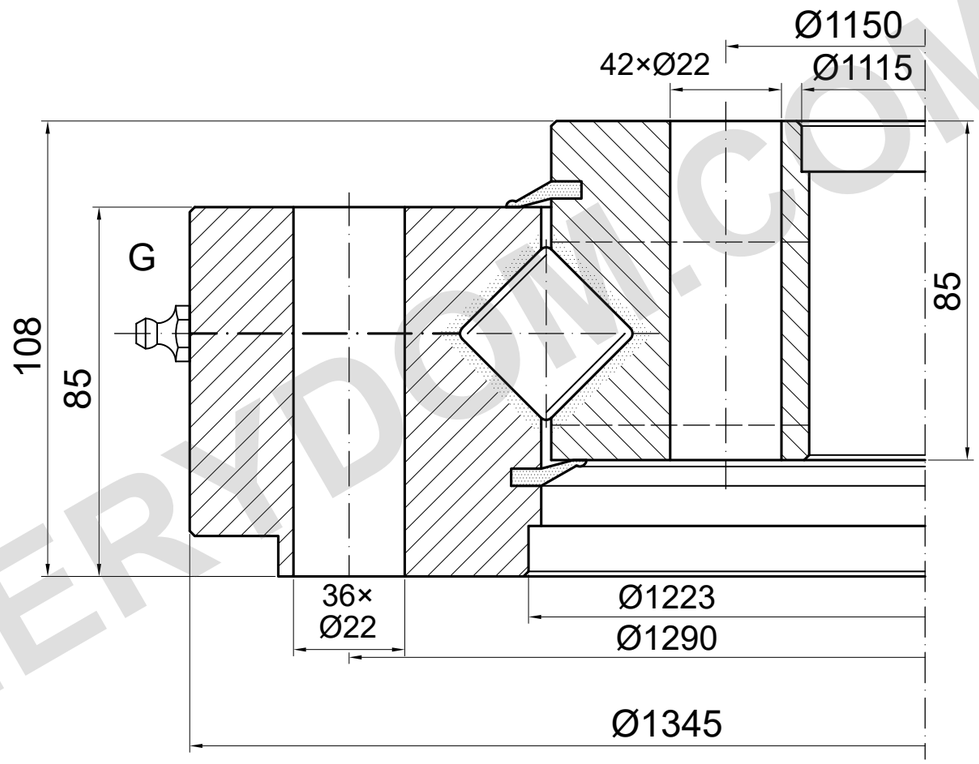

LOAD CAPACITY

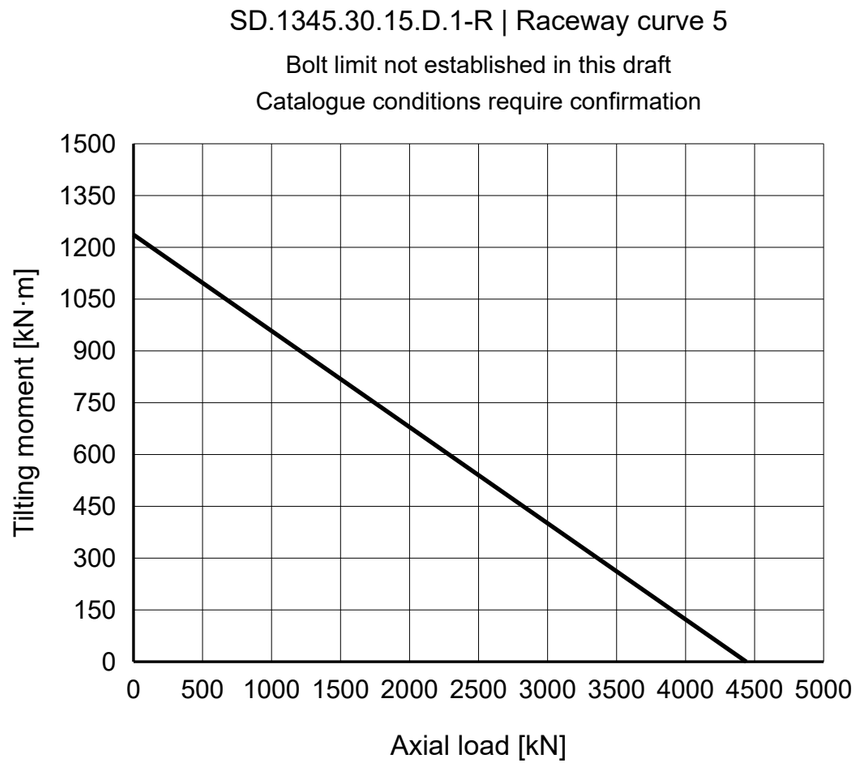

REFERENCE NOTES

Dimensions in mm. Reference drawing; do not scale.

Source: TGB ED.7 (2021); dimensions p31; load chart p31, 5.

Shoulder diameter, hole positions and G details unconfirmed; section schematic.

TGB SD.1345.30.15.D.1-R — Product page | MERYDOM

MERYDOM
Crossed-roller slewing bearing
SD.1345.30.15.D.1-R
REFERENCE: TGB / SD.25-30.D-R
REFERENCE | NTS | mm | Sheet 1/1

MERYDOM.COM