BEARING SECTION

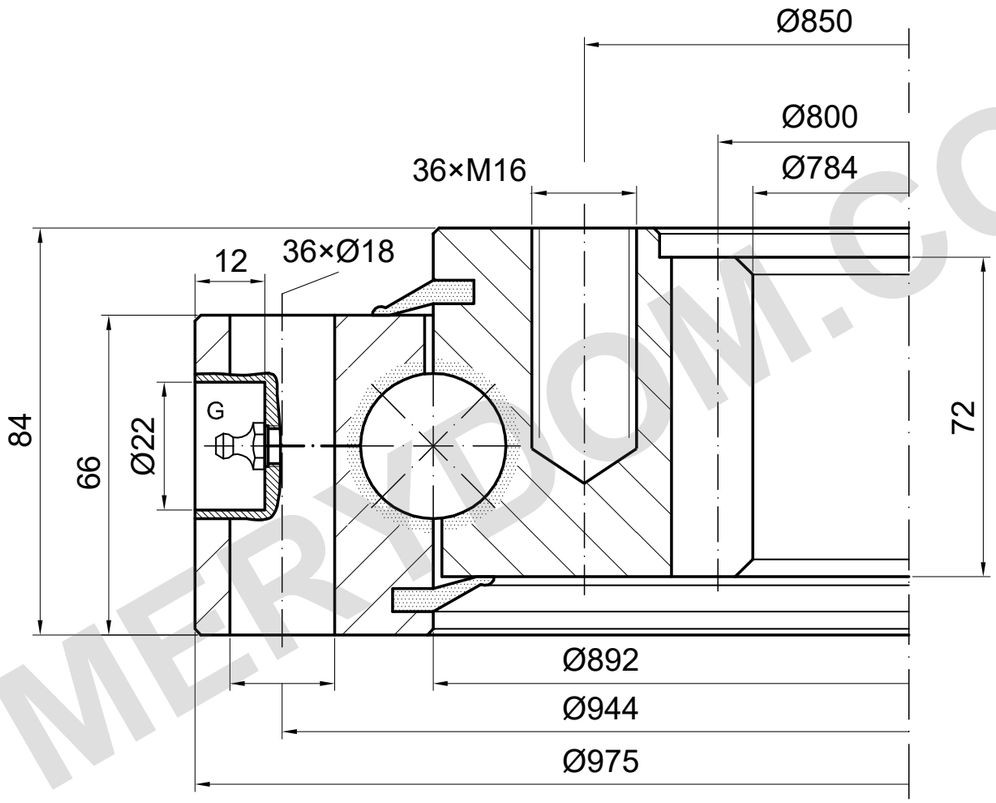

m=8 z=100 α=20°

G: number and location require confirmation

LOAD CAPACITY

I.980.25.00.D.3 | Load curve 7

Raceway only; bolt limit unconfirmed

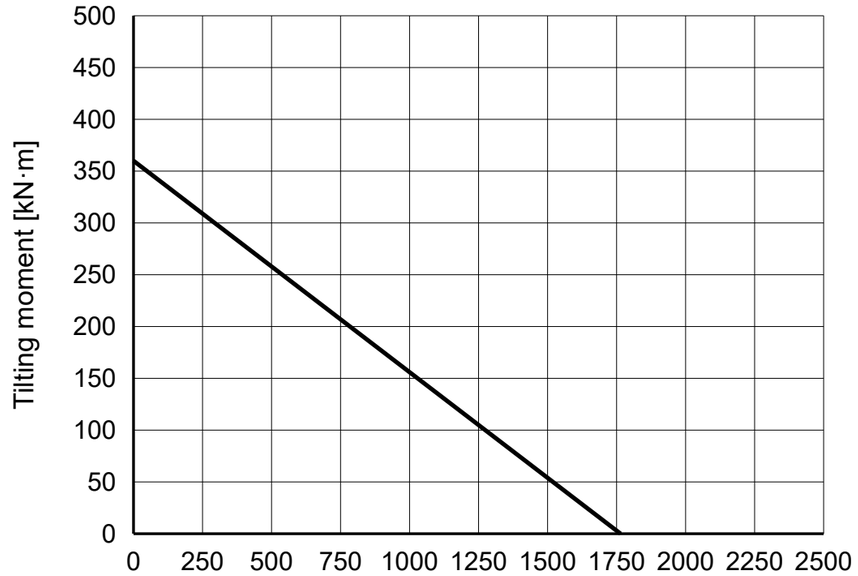

REFERENCE NOTES

Dimensions in mm. Reference drawing; do not scale.

Source: TGB ED.7 (2021); dimensions p25; load chart p25, 7.

Inner blind hole schematic; opening face, drill/thread depths and hole positions unconfirmed.

TGB I.980.25.00.D.3 — Product page | MERYDOM

MERYDOM
Single-row ball slewing bearing
I.980.25.00.D.3
REFERENCE: TGB / I.25.D
REFERENCE | NTS | mm | Sheet 1/1

MERYDOM.COM