BEARING SECTION

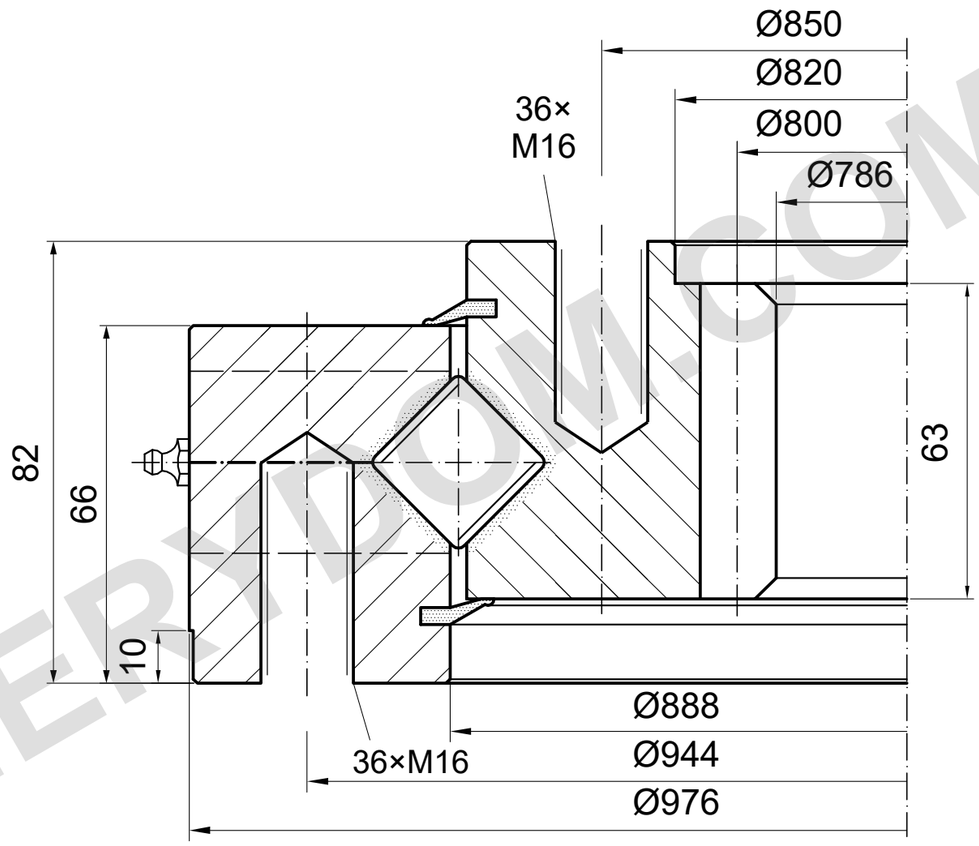

m=8 z=100 α=20°

LOAD CAPACITY

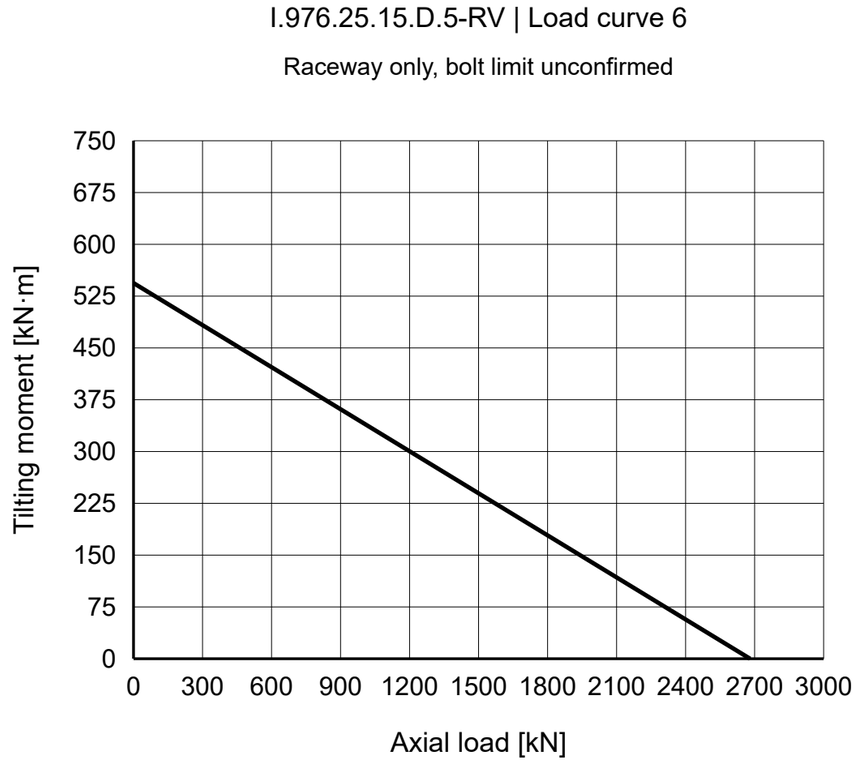

REFERENCE NOTES

Dimensions in mm. Reference drawing; do not scale.

Source: TGB ED.7 (2021); dimensions p27; load chart p27, 6.

Blind threaded holes schematic; opening faces, depths, positions and lubrication unconfirmed.

TGB I.976.25.15.D.5-RV — Product page | MERYDOM

MERYDOM
Crossed-roller slewing bearing
I.976.25.15.D.5-RV
REFERENCE: TGB / I.20-25.D-R
REFERENCE | NTS | mm | Sheet 1/1

MERYDOM.COM