BEARING SECTION

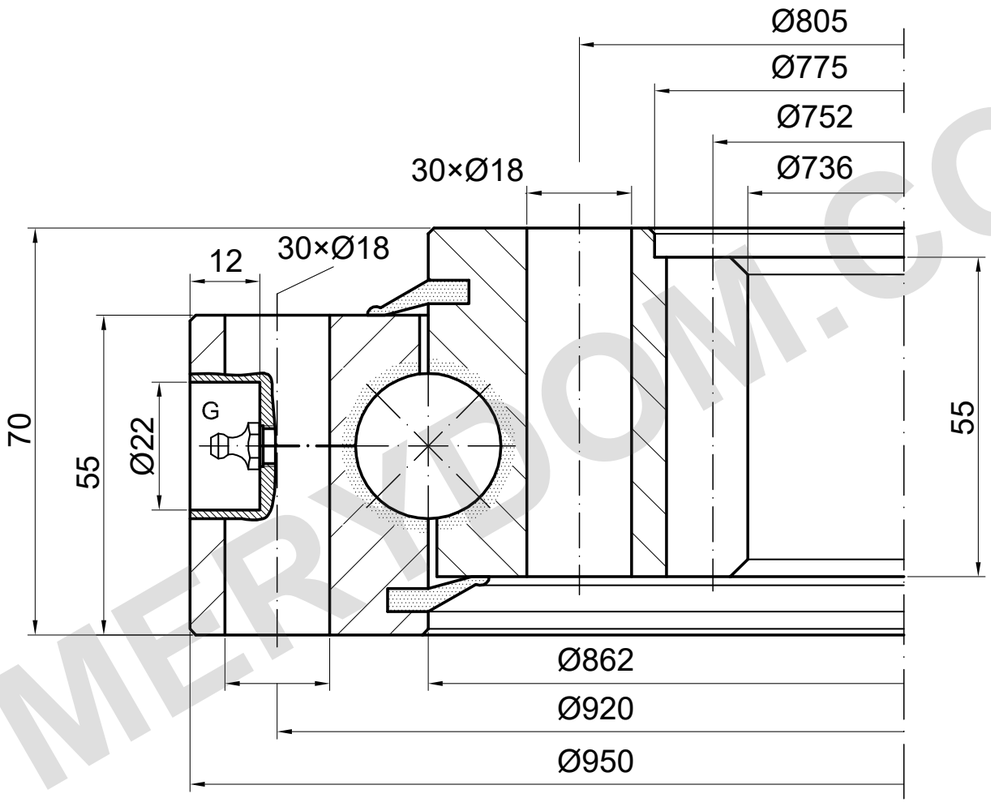

m=8 z=94 α=20°

G: number and location require confirmation

LOAD CAPACITY

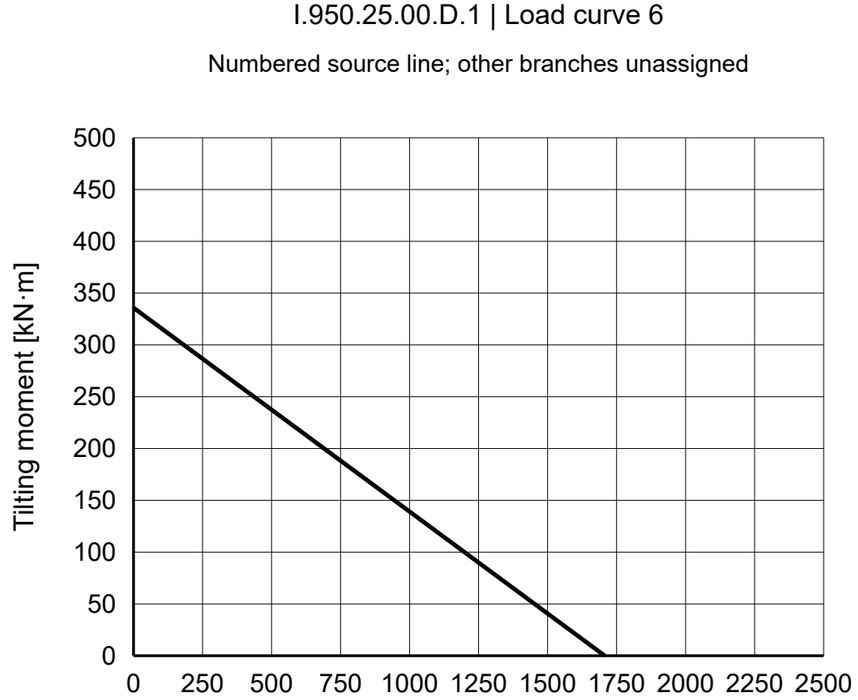

REFERENCE NOTES

Dimensions in mm. Reference drawing; do not scale.

Source: TGB ED.7 (2021); dimensions p25; load chart p25, 6.

Mounting details and positions require confirmation.

TGB I.950.25.00.D.1 — Product page | MERYDOM

MERYDOM
Single-row ball slewing bearing
I.950.25.00.D.1
REFERENCE: TGB / I.25.D
REFERENCE | NTS | mm | Sheet 1/1

MERYDOM.COM