BEARING SECTION

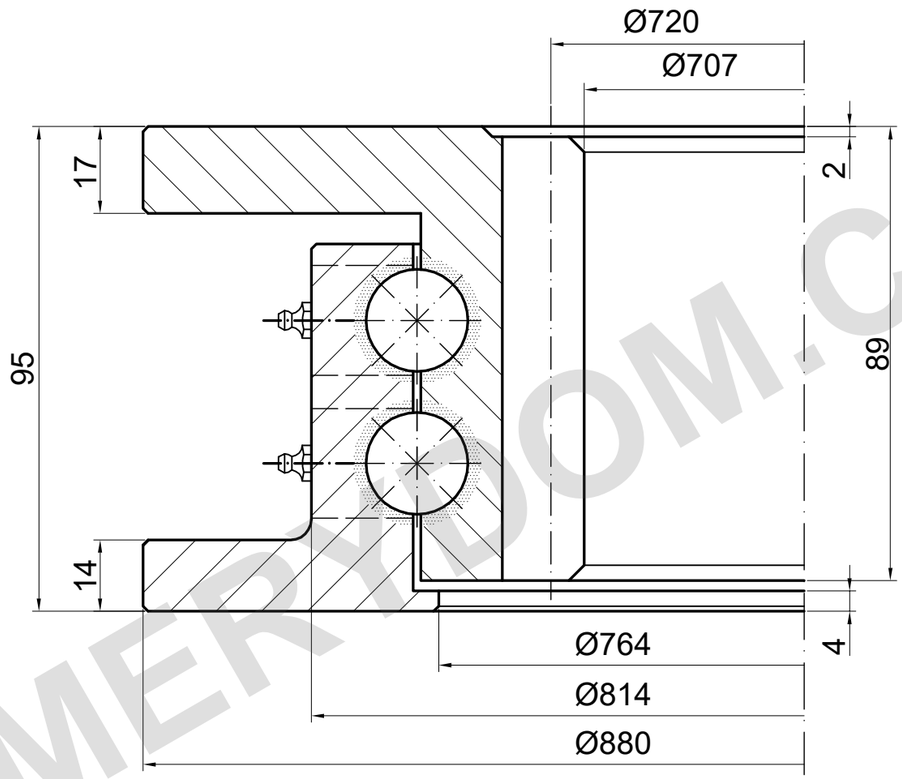

m=6 z=120 xm=+0.5 α=20°

LOAD CAPACITY

I.880.2.20.00.A | Load curve 1

Catalogue curve; detailed drawing required

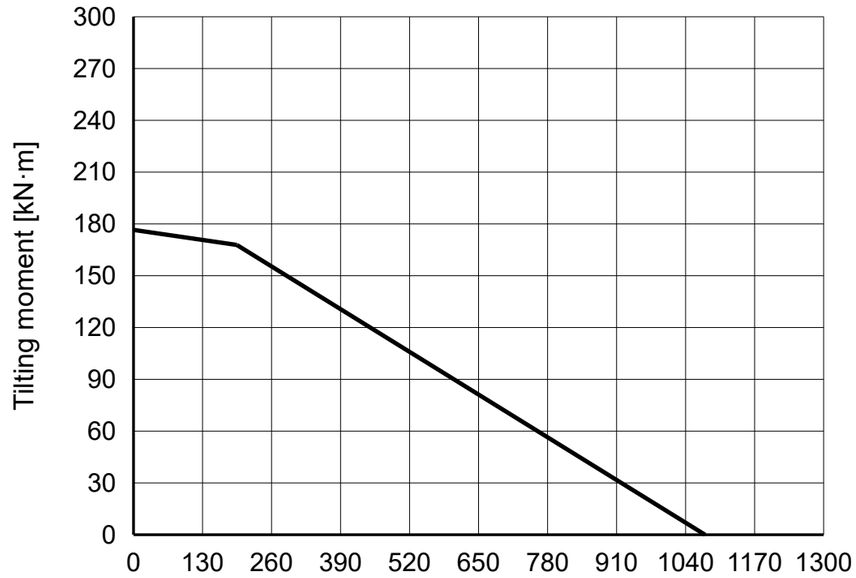

REFERENCE NOTES

Dimensions in mm. Reference drawing; do not scale.

Source: TGB ED.7 (2021); dimensions p22; load chart p22, 1.

ED.7 top flange 17; Matis 14. Hole groups unknown; confirm order drawing.

TGB I.880.2.20.00.A — Product page | MERYDOM

TGB ED.7 catalogue reference. Confirm actual dimensions and mounting holes against the order drawing.

MERYDOM
Double-row ball slewing bearing
I.880.2.20.00.A
REFERENCE: TGB / I.2.20.A
REFERENCE | NTS | mm | Sheet 1/1

MERYDOM.COM