## BEARING SECTION

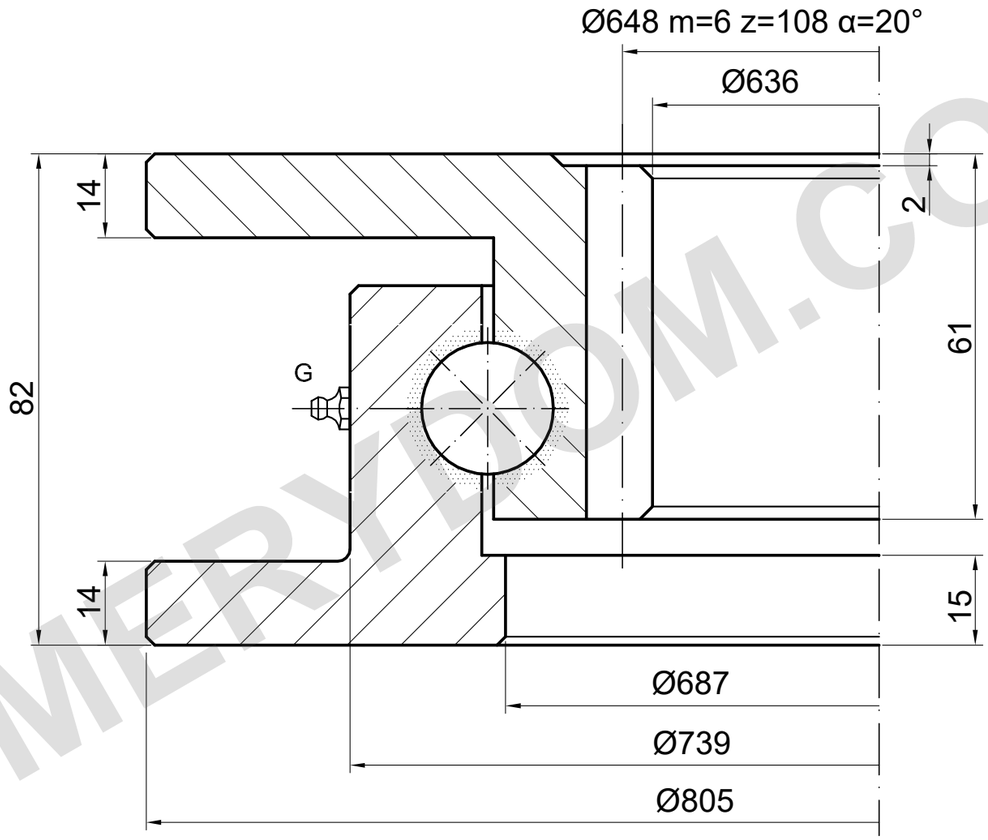


G: 2×DIN 71412 AM 6×1 (ED.7)

## LOAD CAPACITY

I.800.22.00.A | Load curve 4

Catalogue curve; detailed drawing required

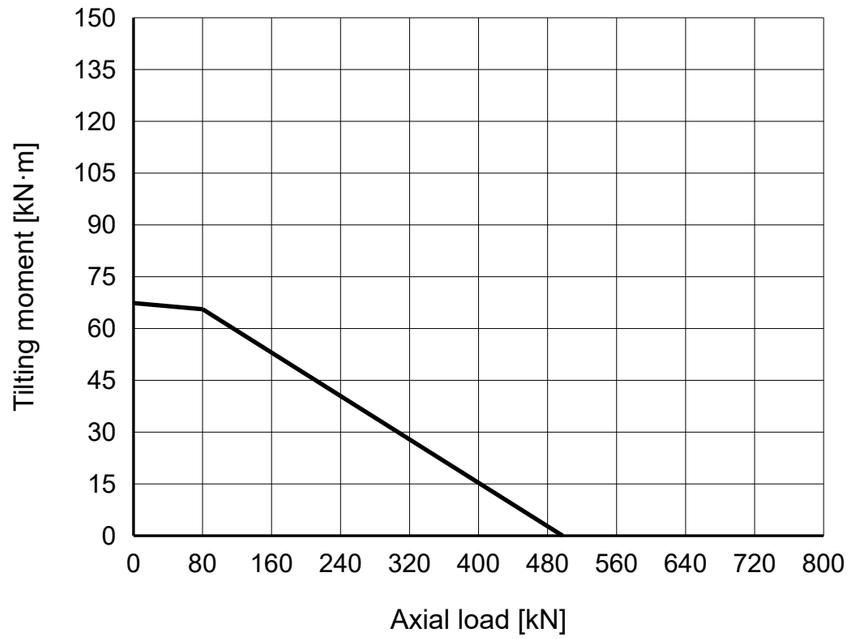


### REFERENCE NOTES

Dimensions in mm. Reference drawing; do not scale.

Source: TGB ED.7 (2021); dimensions p21; load chart p21, 4.

Mounting details and positions require confirmation.

TGB I.800.22.00.A — Product page | MERYDOM

| |
|---|
| **MERYDOM** |
| Single-row ball slewing bearing |
| **I.800.22.00.A** |
| REFERENCE: TGB / I.22.A |
| REFERENCE \| NTS \| mm \| Sheet 1/1 |

MERYDOM.COM