BEARING SECTION

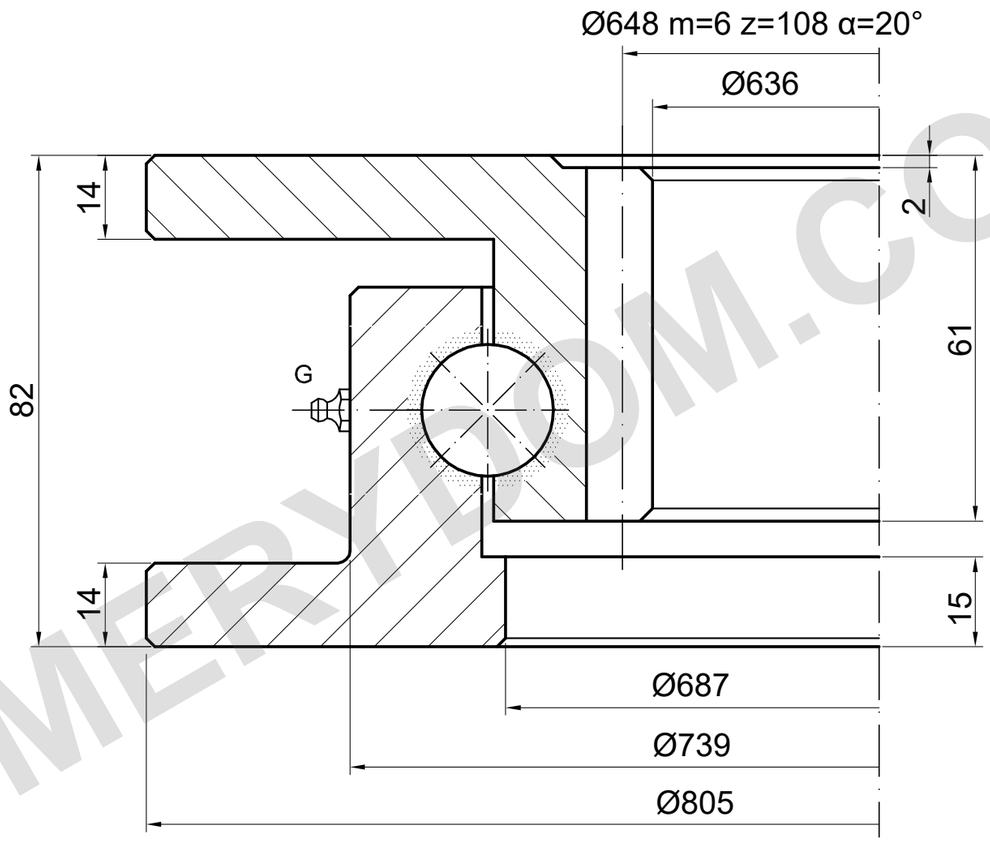

G: 2×DIN 71412 AM 6×1 (ED.7)

LOAD CAPACITY

I.800.22.00.A-T | Load curve 4

Catalogue curve; detailed drawing required

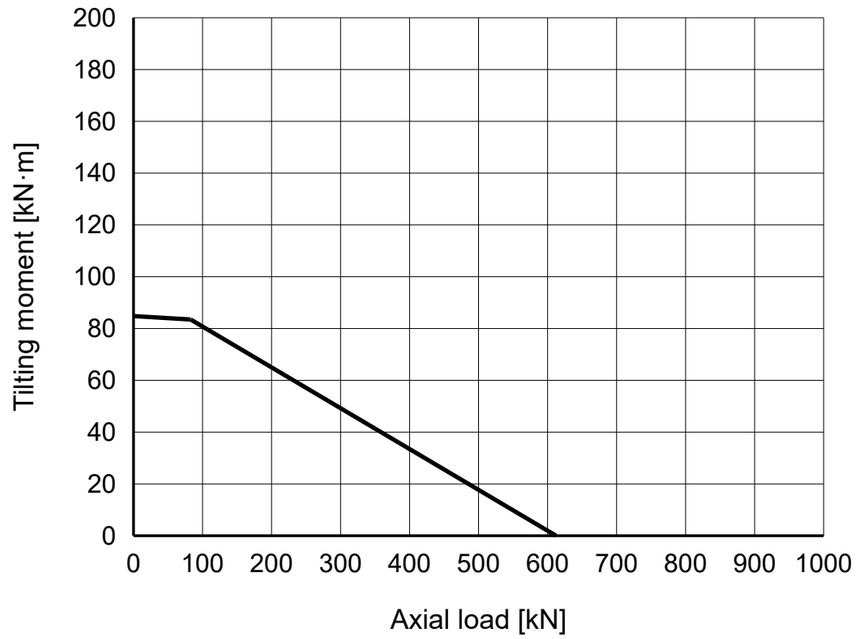

REFERENCE NOTES

Dimensions in mm. Reference drawing; do not scale.

Source: TGB ED.7 (2021); dimensions p22; load chart p22, 4.

Mounting details and positions require confirmation.

TGB I.800.22.00.A-T — Product page | MERYDOM

MERYDOM
Single-row ball slewing bearing
I.800.22.00.A-T
REFERENCE: TGB / I.22.A.T
REFERENCE | NTS | mm | Sheet 1/1

MERYDOM.COM