BEARING SECTION

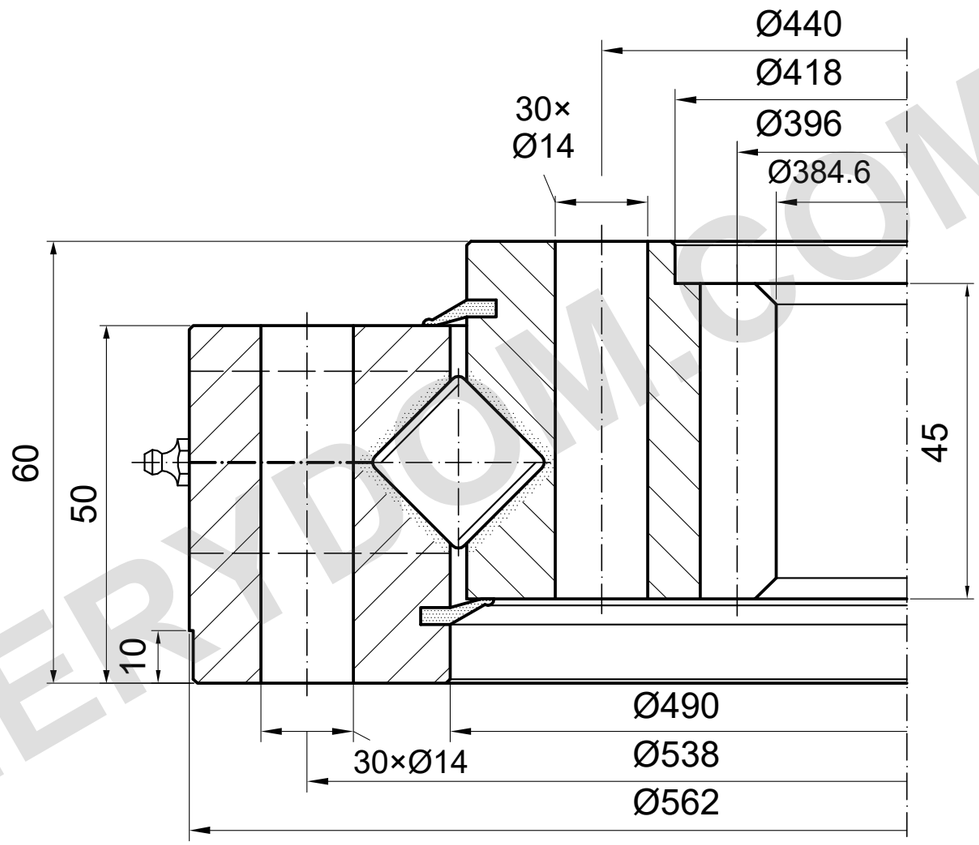

m=6 z=66 α=20°

LOAD CAPACITY

I.562.20.15.D.1-RV | Load curve 1

Catalogue curve; detailed drawing required

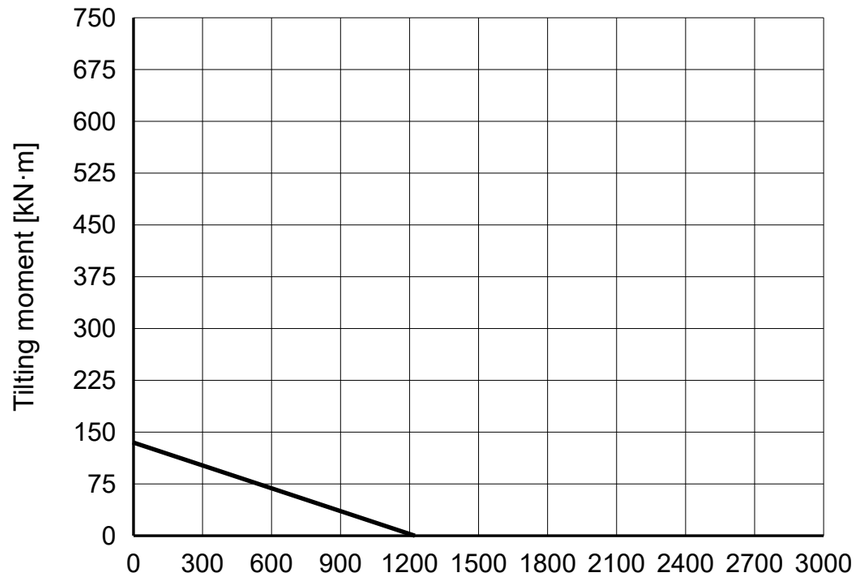

REFERENCE NOTES

Dimensions in mm. Reference drawing; do not scale.

Source: TGB ED.7 (2021); dimensions p27; load chart p27, 1.

Mounting positions and lubrication details require confirmation.

TGB I.562.20.15.D.1-RV — Product page | MERYDOM

MERYDOM
Crossed-roller slewing bearing
I.562.20.15.D.1-RV
REFERENCE: TGB / I.20-25.D-R
REFERENCE | NTS | mm | Sheet 1/1

MERYDOM.COM