BEARING SECTION

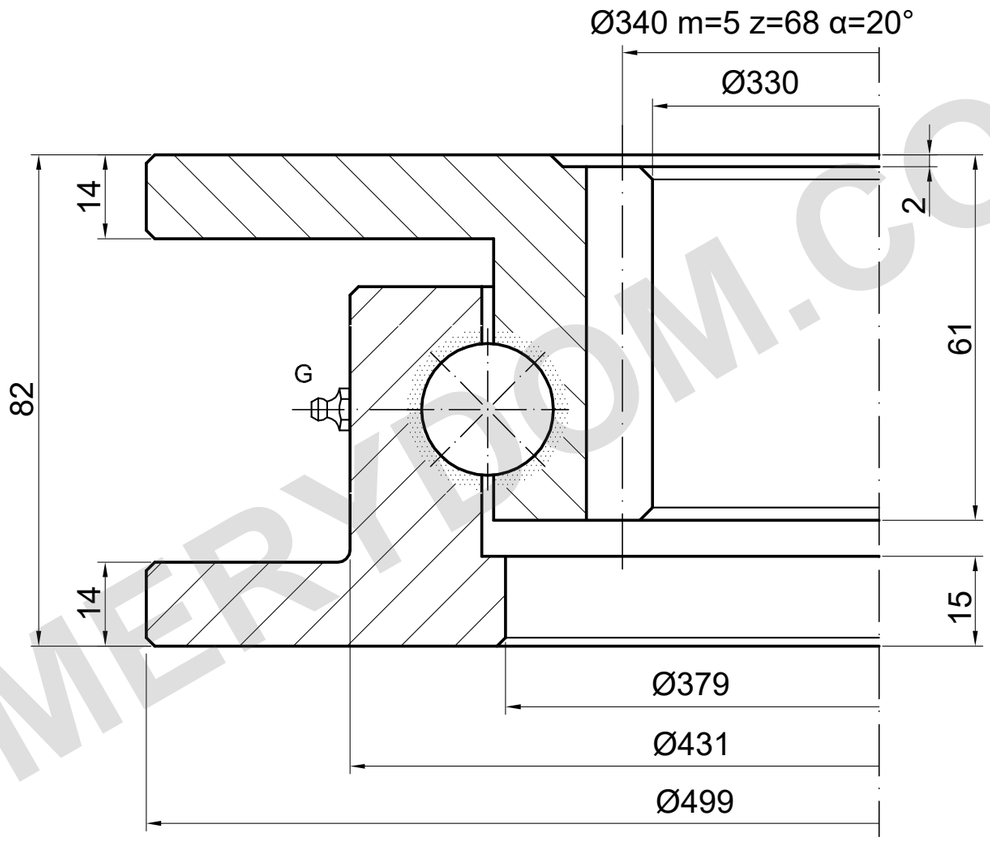

G: 2×DIN 71412 AM 6×1 (ED.7)

LOAD CAPACITY

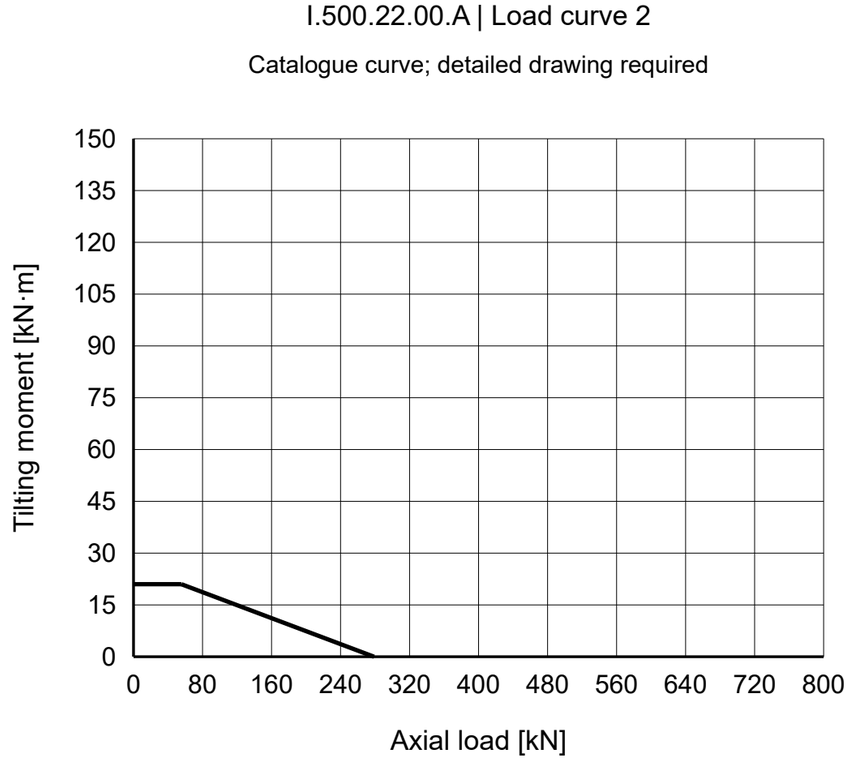

REFERENCE NOTES

Dimensions in mm. Reference drawing; do not scale.

Source: TGB ED.7 (2021); dimensions p21; load chart p21, 2.

Mounting details and positions require confirmation.

TGB I.500.22.00.A — Product page | MERYDOM

MERYDOM
Single-row ball slewing bearing
I.500.22.00.A
REFERENCE: TGB / I.22.A
REFERENCE | NTS | mm | Sheet 1/1

MERYDOM.COM