BEARING SECTION

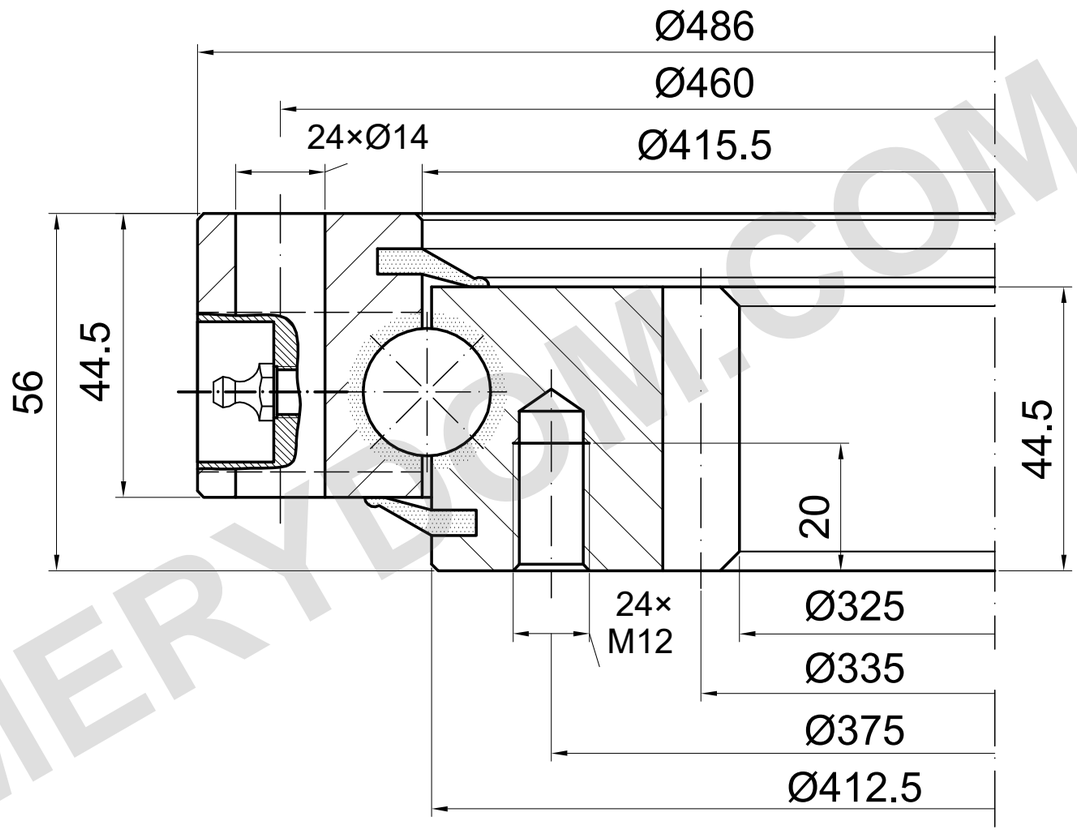

m=5 z=67 α=20°

LOAD CAPACITY

I.486.20.00.B | Load curve 1

Catalogue curve; detailed drawing required

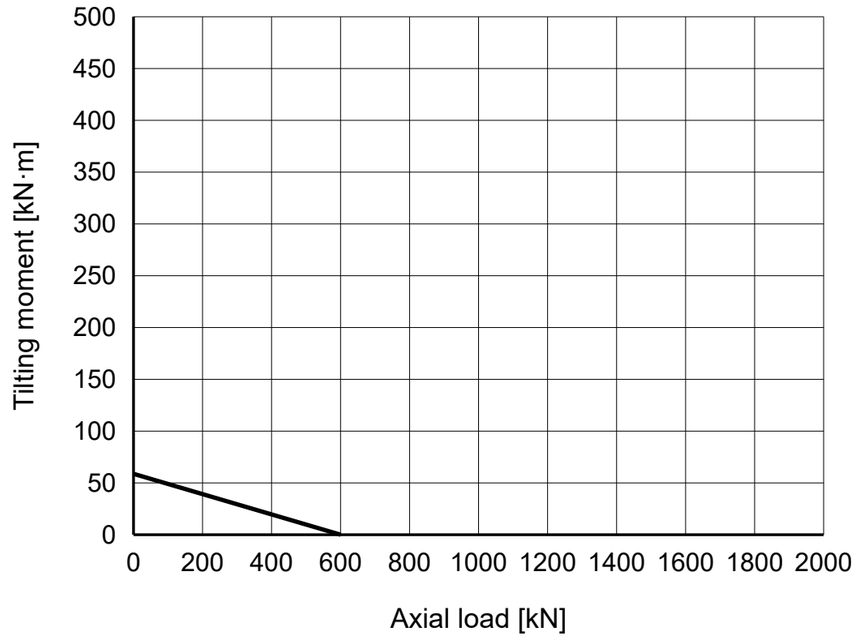

REFERENCE NOTES

Dimensions in mm. Reference drawing; do not scale.

Source: TGB ED.7 (2021); dimensions p23; load chart p23, 1.

4 × M8×1 grease fittings; hole positions and thread depth to confirm.

TGB I.486.20.00.B — Product page | MERYDOM

MERYDOM
Single-row ball slewing bearing
I.486.20.00.B
REFERENCE: TGB / I.20.B
REFERENCE | NTS | mm | Sheet 1/1

MERYDOM.COM