BEARING SECTION

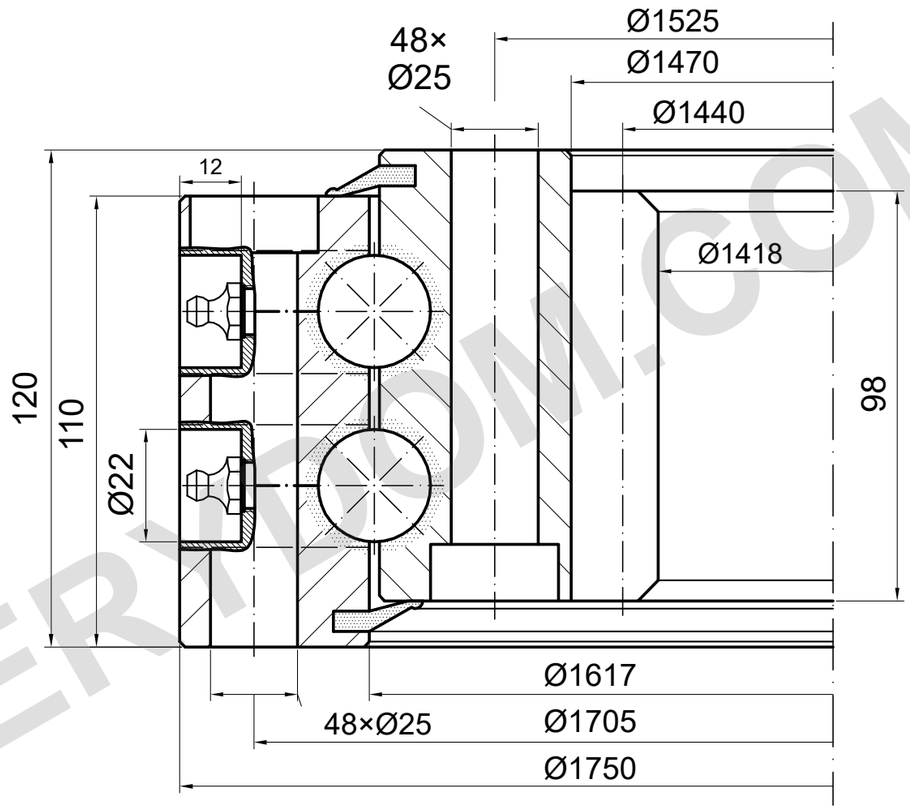

m=12 z=120 α=20°

LOAD CAPACITY

I.1750.2.30.20.D.6 | Load curve 5

Catalogue curve; detailed drawing required
Raceway only, bolt limit unconfirmed

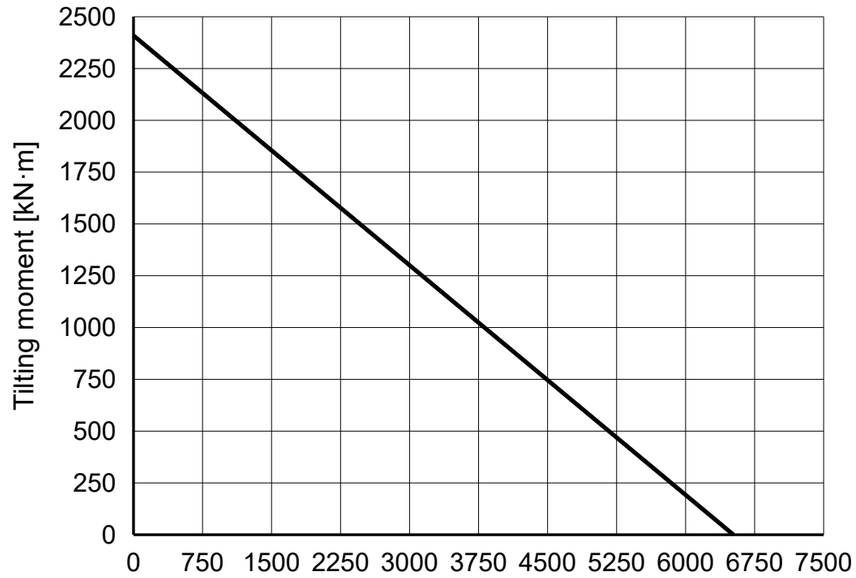

REFERENCE NOTES

Dimensions in mm. Reference drawing; do not scale.

Source: TGB ED.7 (2021); dimensions p26; load chart p26, 5.

Mounting positions and lubrication details require confirmation.

TGB I.1750.2.30.20.D.6 — Product page | MERYDOM

MERYDOM
Double-row ball slewing bearing
I.1750.2.30.20.D.6
REFERENCE: TGB / I.2.22-25-30.D
REFERENCE | NTS | mm | Sheet 1/1

MERYDOM.COM