## BEARING SECTION

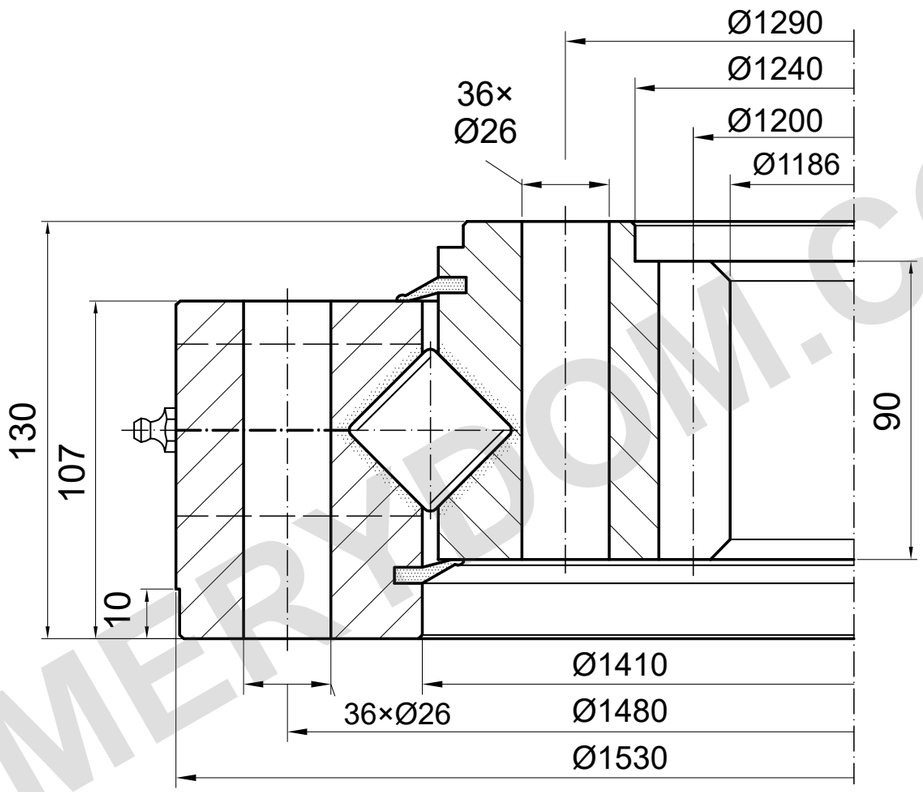


m=10 z=120 α=20°

## LOAD CAPACITY

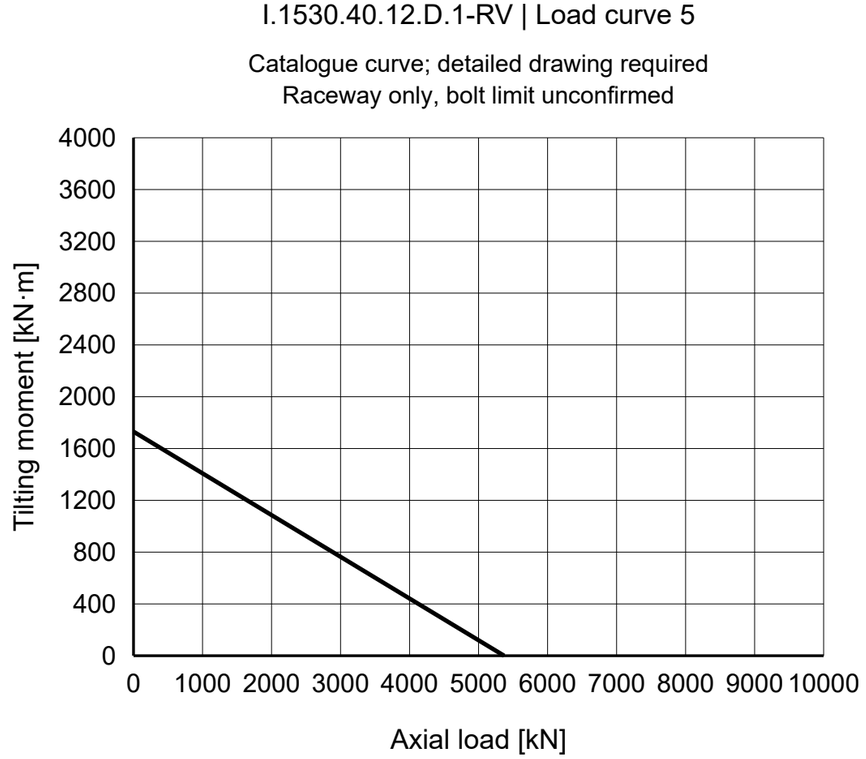


### REFERENCE NOTES

Dimensions in mm. Reference drawing; do not scale.

Source: TGB ED.7 (2021); dimensions p27; load chart p27, 5.

Mounting positions and lubrication details require confirmation.

TGB I.1530.40.12.D.1-RV — Product page | MERYDOM

| MERYDOM |
| --- |
| Crossed-roller slewing bearing |
| **I.1530.40.12.D.1-RV** |
| REFERENCE: TGB / I.30-40-50.D-R |
| REFERENCE \| NTS \| mm \| Sheet 1/1 |

MERYDOM.COM