BEARING SECTION

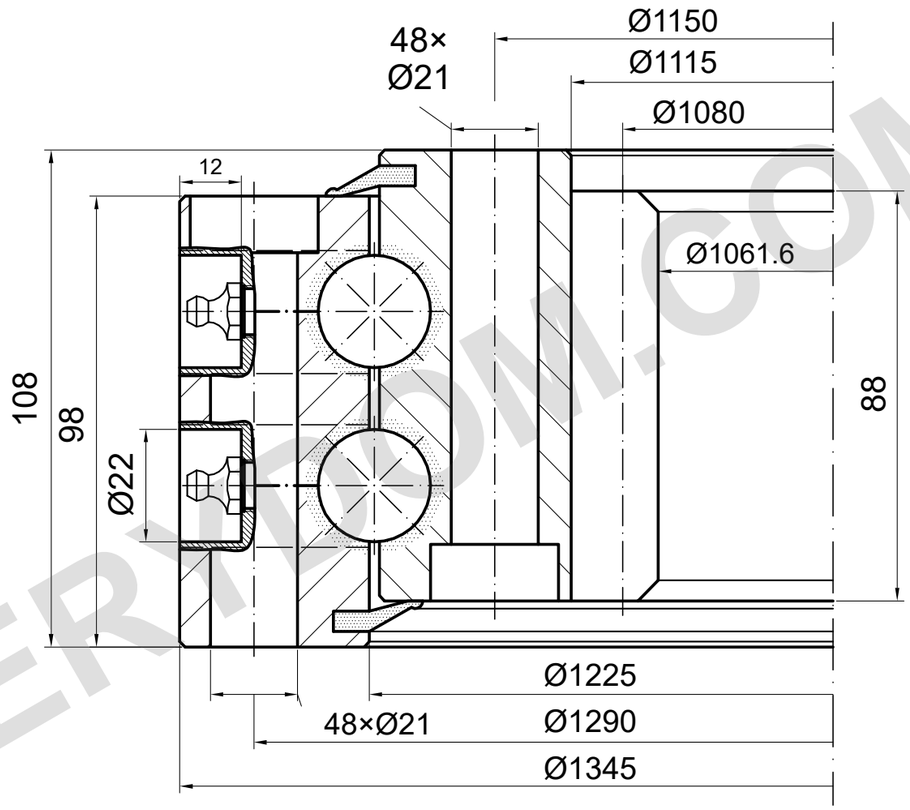

m=10 z=108 α=20°

LOAD CAPACITY

I.1346.2.30.05.D.6 | Load curve 4

Catalogue curve; detailed drawing required
Raceway only, bolt limit unconfirmed

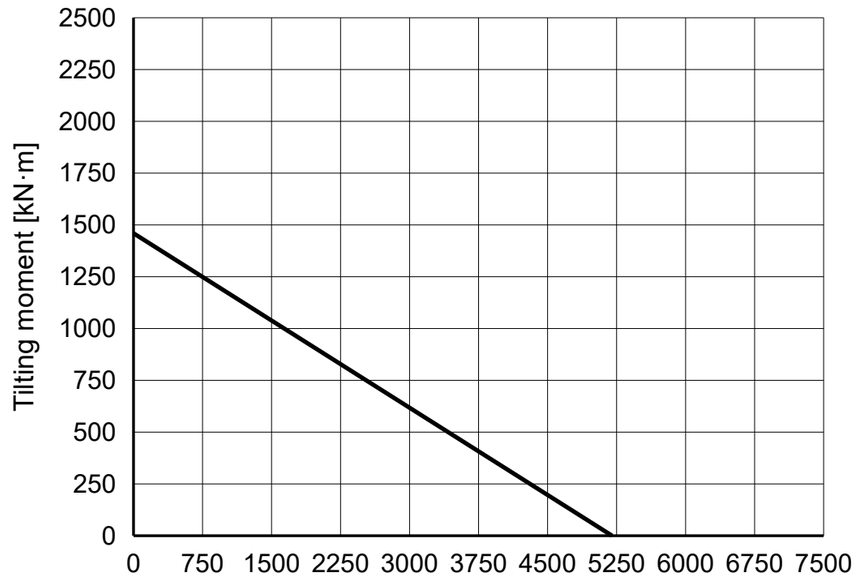

REFERENCE NOTES

Dimensions in mm. Reference drawing; do not scale.

Source: TGB ED.7 (2021); dimensions p26; load chart p26, 4.

Mounting positions and lubrication details require confirmation.

TGB I.1346.2.30.05.D.6 — Product page | MERYDOM

MERYDOM
Double-row ball slewing bearing
I.1346.2.30.05.D.6
REFERENCE: TGB / I.2.22-25-30.D
REFERENCE | NTS | mm | Sheet 1/1

MERYDOM.COM