BEARING SECTION

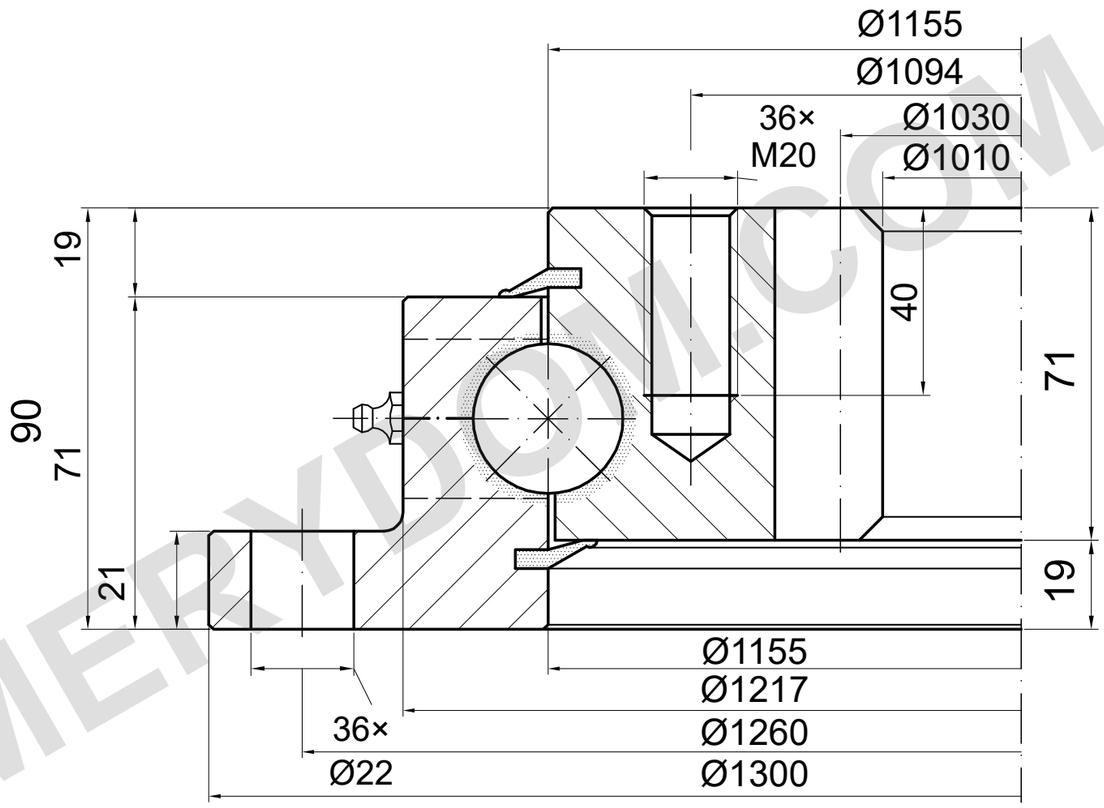

m=10 z=103 α=20°

LOAD CAPACITY

I.1300.32.00.C | Load curve 3

Catalogue curve; detailed drawing required

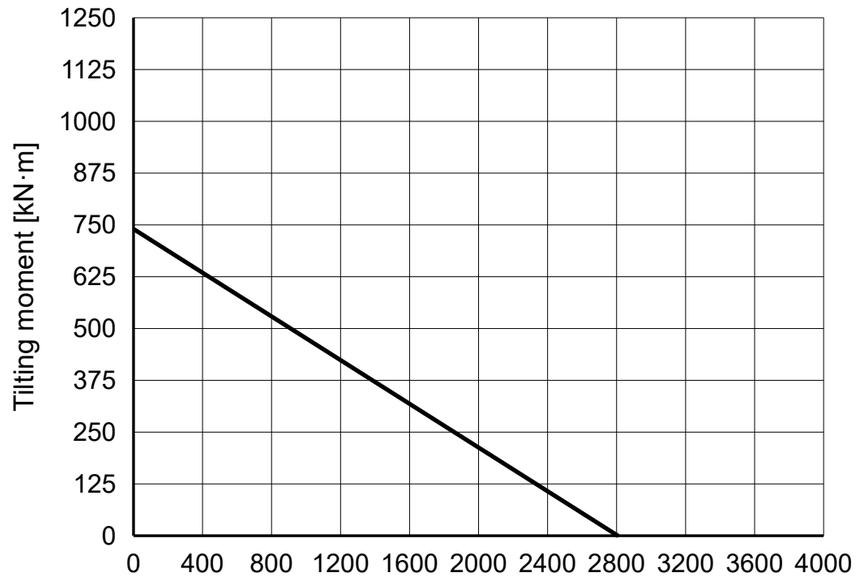

REFERENCE NOTES

Dimensions in mm. Reference drawing; do not scale.

Source: TGB ED.7 (2021); dimensions p24; load chart p24, 3.

Grease fitting quantity, thread and hole positions to confirm.

TGB I.1300.32.00.C — Product page | MERYDOM

MERYDOM
Single-row ball slewing bearing
I.1300.32.00.C
REFERENCE: TGB / I.32.C
REFERENCE | NTS | mm | Sheet 1/1

MERYDOM.COM