BEARING SECTION

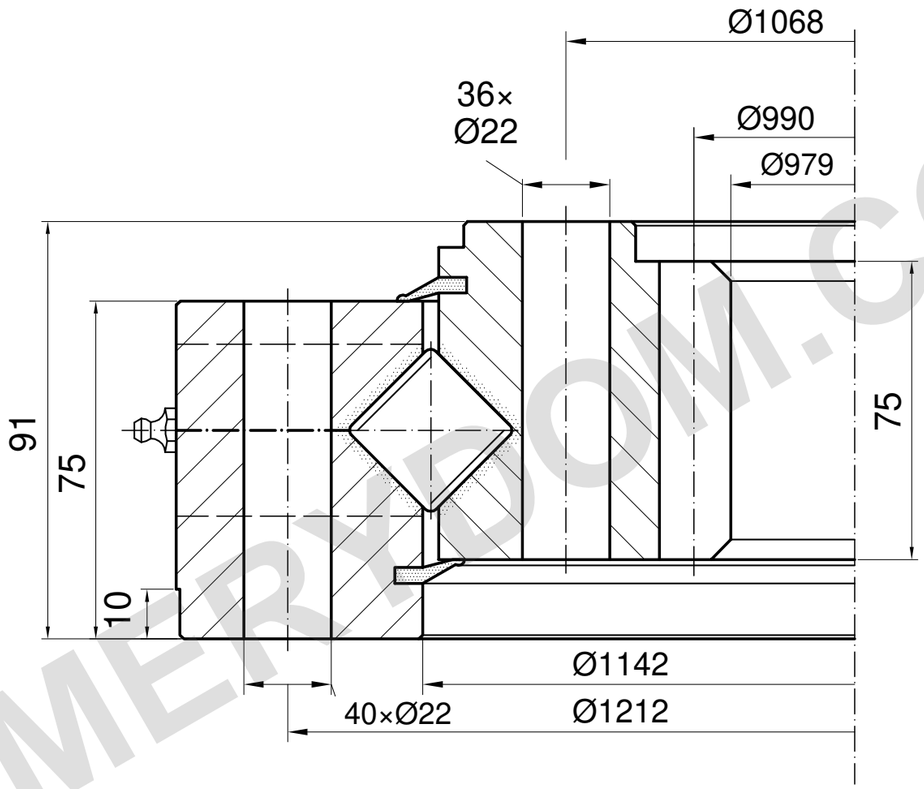

m=10 z=99 α=20°

LOAD CAPACITY

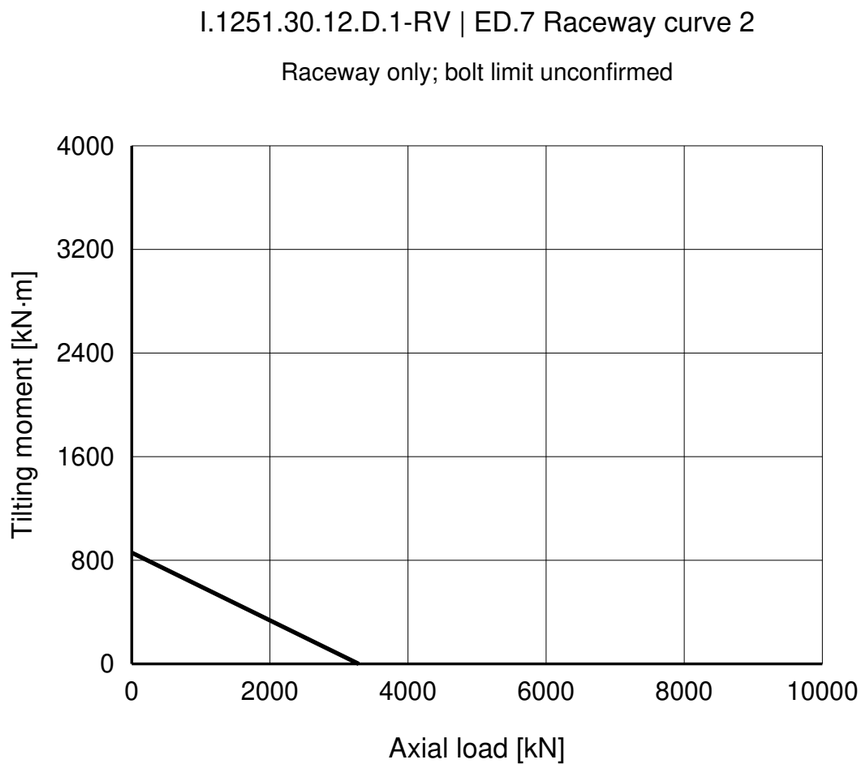

REFERENCE NOTES

Dimensions in mm. Reference drawing; do not scale.

Source: TGB ED.7 (2021); dimensions p27; load chart p27, 2.

Outside diameter differs by edition; ED.7 omits shoulder; confirm order drawing.

TGB I.1251.30.12.D.1-RV — Product page | MERYDOM

TGB ED.7 catalogue reference. Confirm actual dimensions and mounting holes against the order drawing.

MERYDOM
Crossed-roller slewing bearing
I.1251.30.12.D.1-RV
REFERENCE: TGB / I.30-40-50.D-R
REFERENCE | NTS | mm | Sheet 1/1

MERYDOM.COM