BEARING SECTION

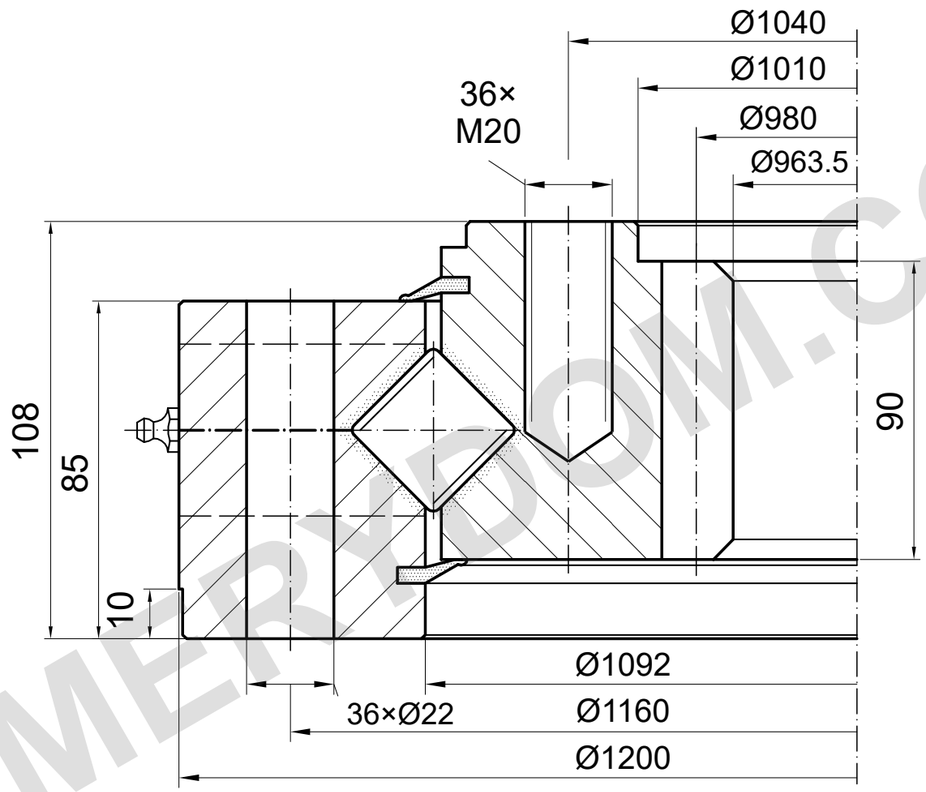

m=10 z=98 α=20°

LOAD CAPACITY

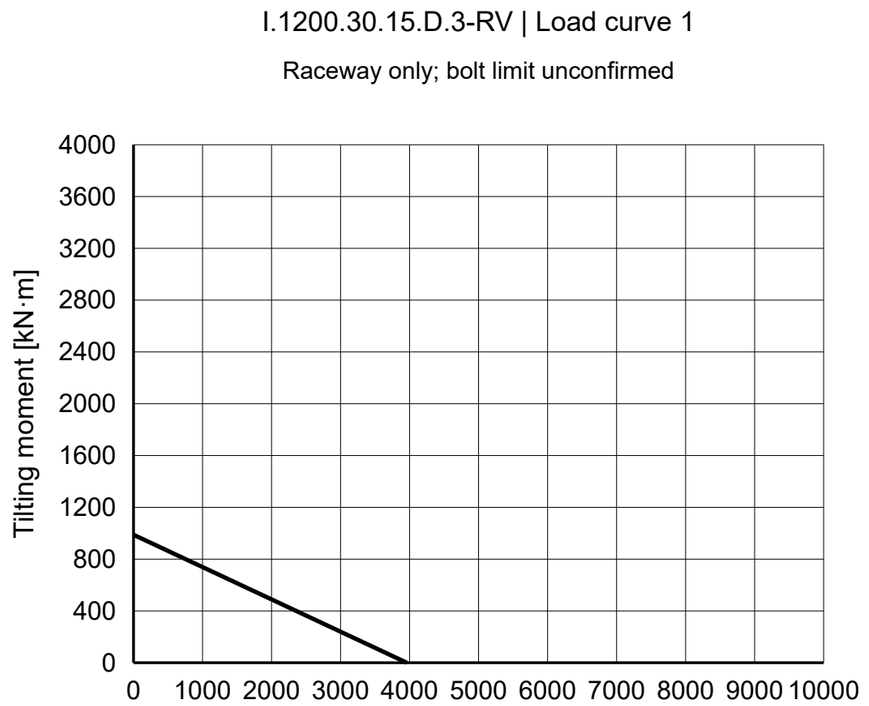

REFERENCE NOTES

Dimensions in mm. Reference drawing; do not scale.

Source: TGB ED.7 (2021); dimensions p27; load chart p27, 1.

Inner blind schematic; opening face, drill/thread depths, hole positions and lubrication require confirmation.

TGB I.1200.30.15.D.3-RV — Product page | MERYDOM

MERYDOM
Crossed-roller slewing bearing
I.1200.30.15.D.3-RV
REFERENCE: TGB / I.30-40-50.D-R
REFERENCE | NTS | mm | Sheet 1/1

MERYDOM.COM