BEARING SECTION

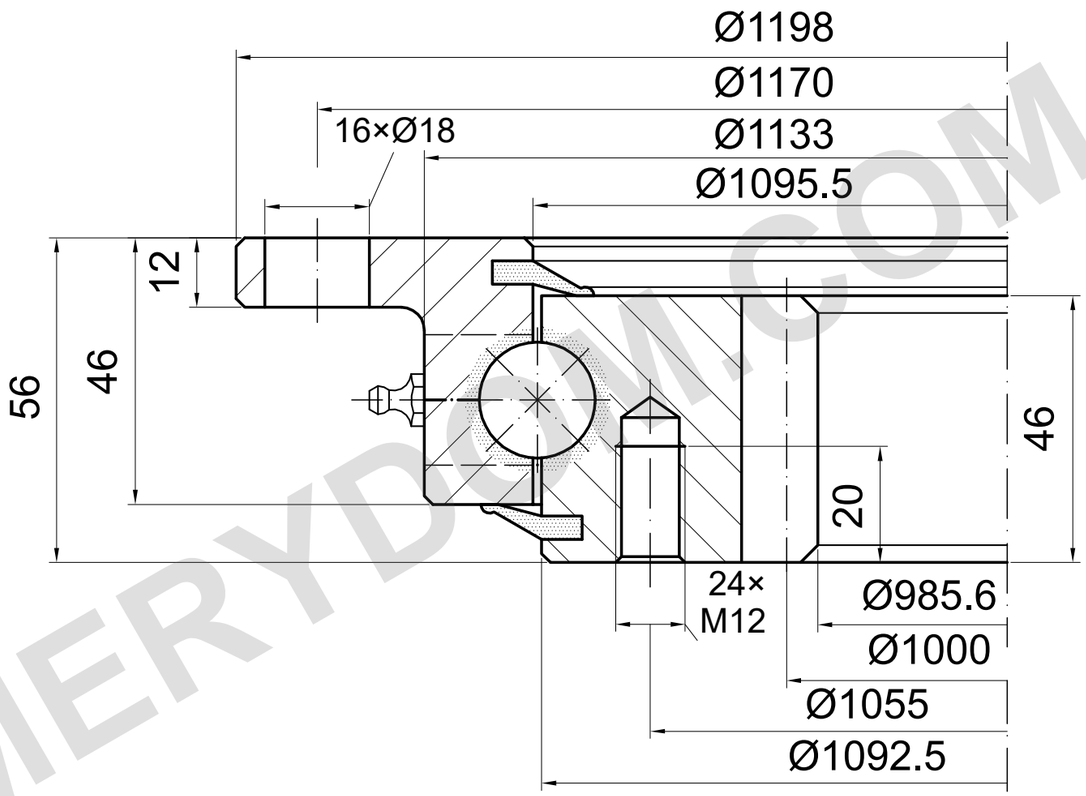

m=8 z=125 α=20°

LOAD CAPACITY

I.1200.20.00.C | Load curve 7

Catalogue curve; detailed drawing required

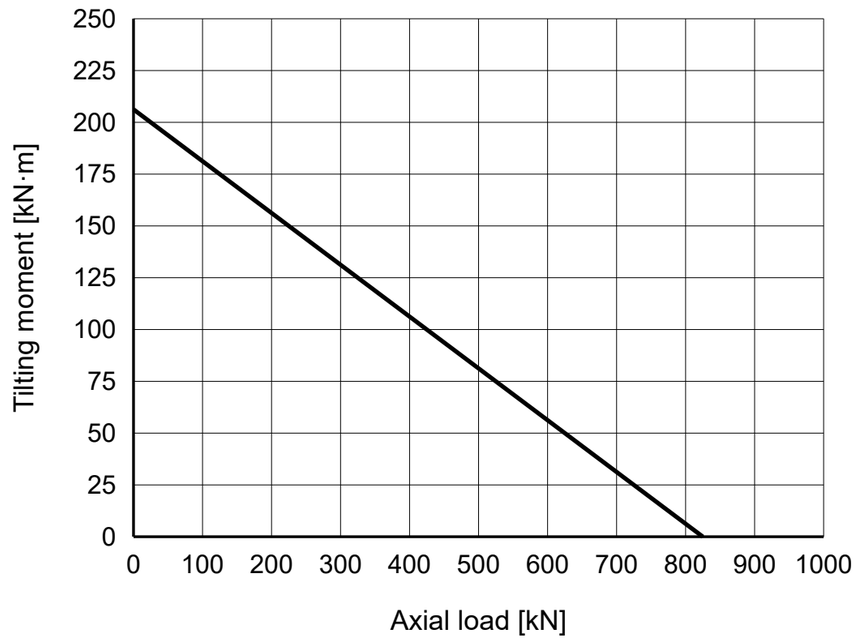

REFERENCE NOTES

Dimensions in mm. Reference drawing; do not scale.

Source: TGB ED.7 (2021); dimensions p24; load chart p24, 7.

4 × M8×1 grease fittings; hole positions and thread depth to confirm.

TGB I.1200.20.00.C — Product page | MERYDOM

MERYDOM
Single-row ball slewing bearing
I.1200.20.00.C
REFERENCE: TGB / I.20.C
REFERENCE | NTS | mm | Sheet 1/1

MERYDOM.COM