BEARING SECTION

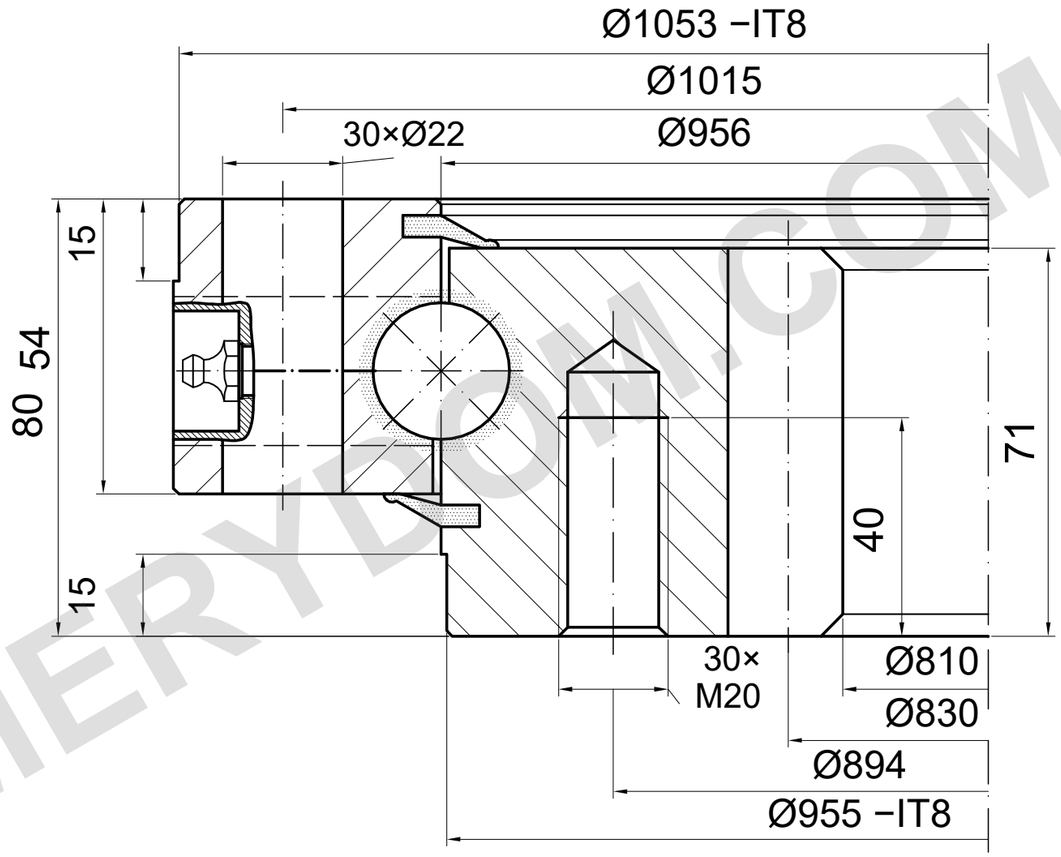

m=10 z=83 α=20°

LOAD CAPACITY

I.1055.25.00.B | Load curve 3

Catalogue curve; detailed drawing required

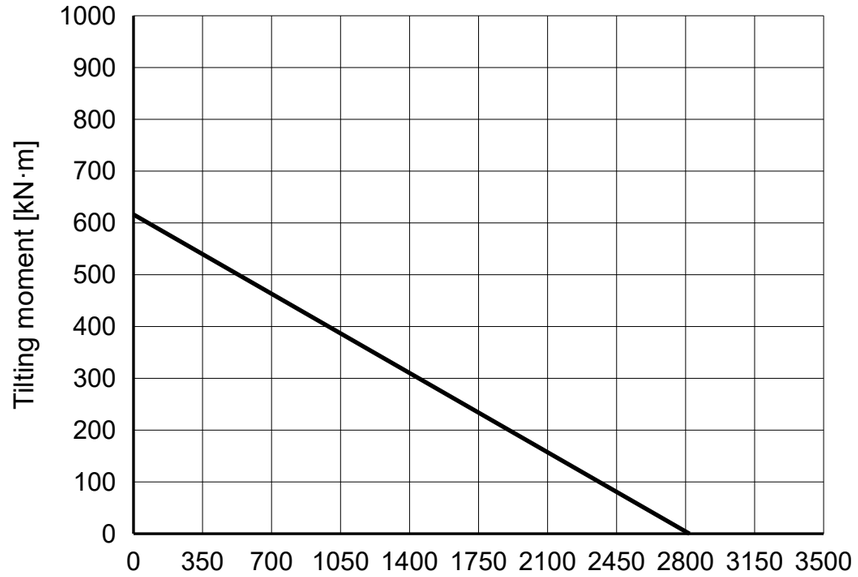

REFERENCE NOTES

Dimensions in mm. Reference drawing; do not scale.

Source: TGB ED.7 (2021); dimensions p23; load chart p23, 3.

4 grease fittings; thread, hole positions and depths to confirm.

TGB I.1055.25.00.B — Product page | MERYDOM

MERYDOM
Single-row ball slewing bearing
I.1055.25.00.B
REFERENCE: TGB / I.25.B
REFERENCE | NTS | mm | Sheet 1/1

MERYDOM.COM