BEARING SECTION

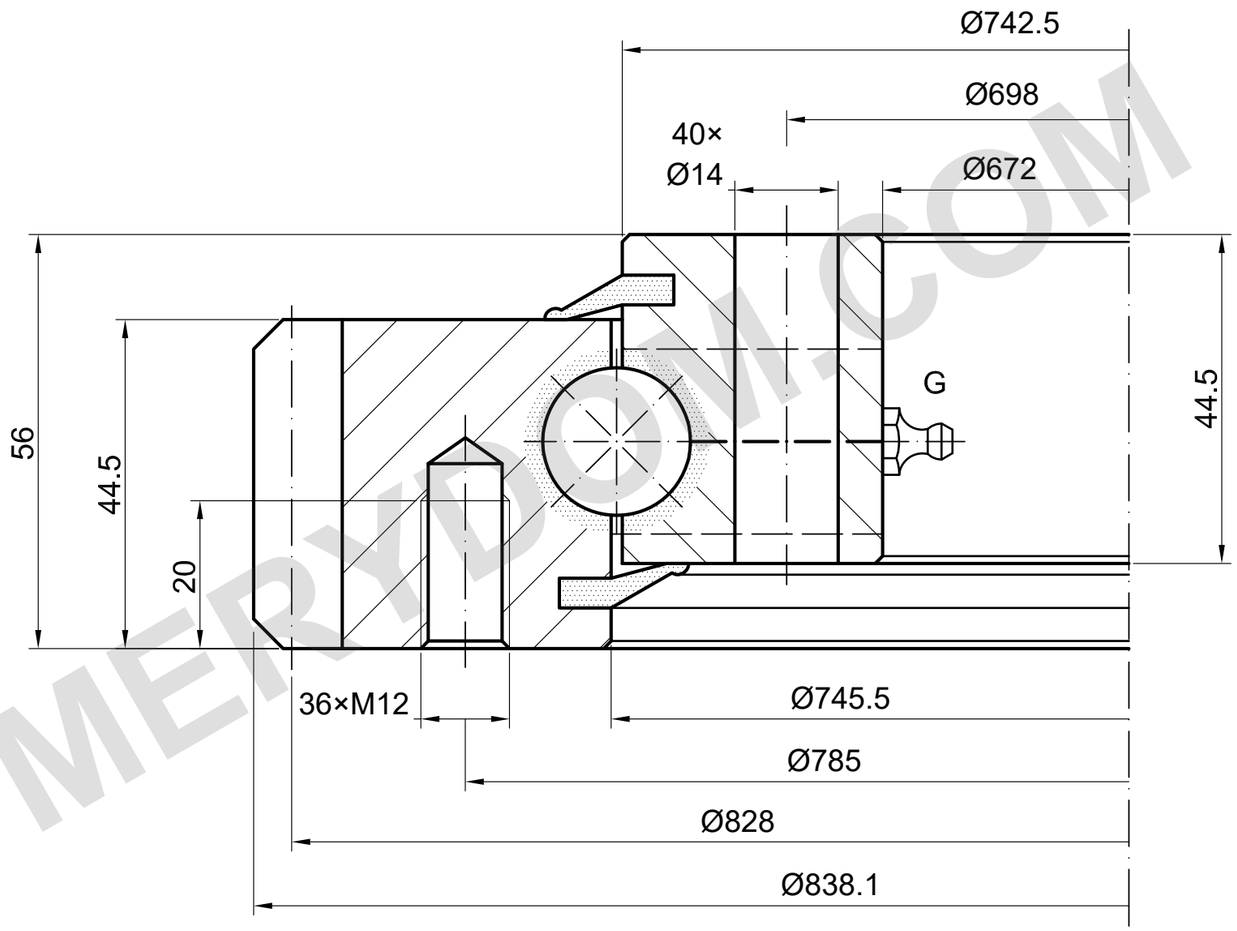

LOAD CAPACITY

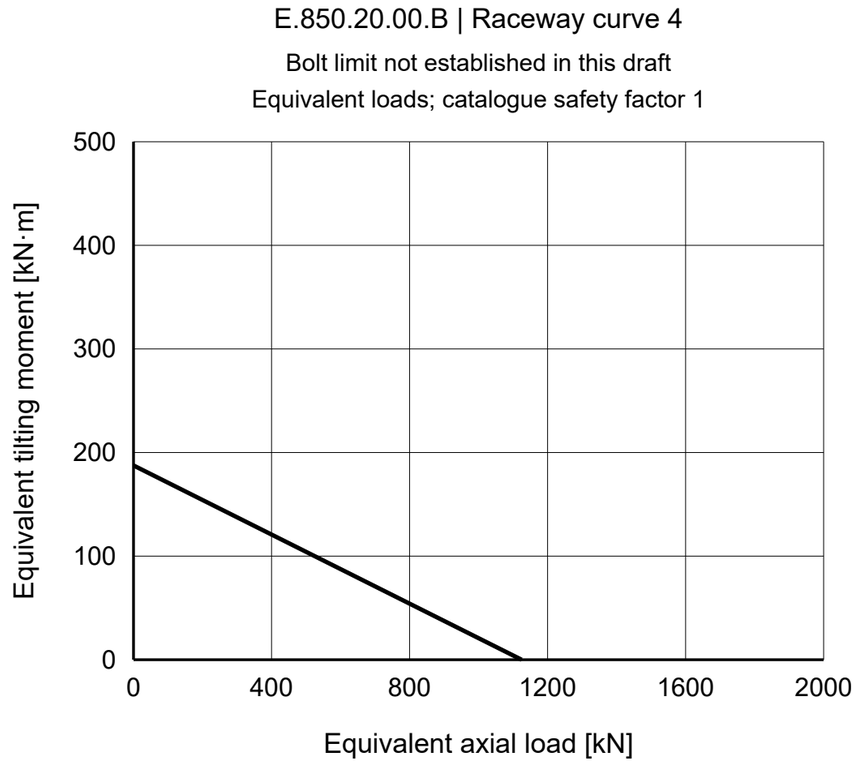

36 × M12 / Ø785 | 40 × Ø14 / Ø698
m 6 | z 138 | 20° | 4 × M8×1

REFERENCE NOTES

Dimensions in mm. Reference drawing; do not scale.

Source: TGB ED.7 (2021); dimensions p15; load chart p15, 4.

Mounting details and positions require confirmation.

TGB E.850.20.00.B — Product page | MERYDOM

MERYDOM
Single-row ball slewing bearing
E.850.20.00.B
REFERENCE: TGB / E.20.B
REFERENCE | NTS | mm | Sheet 1/1

MERYDOM.COM