BEARING SECTION

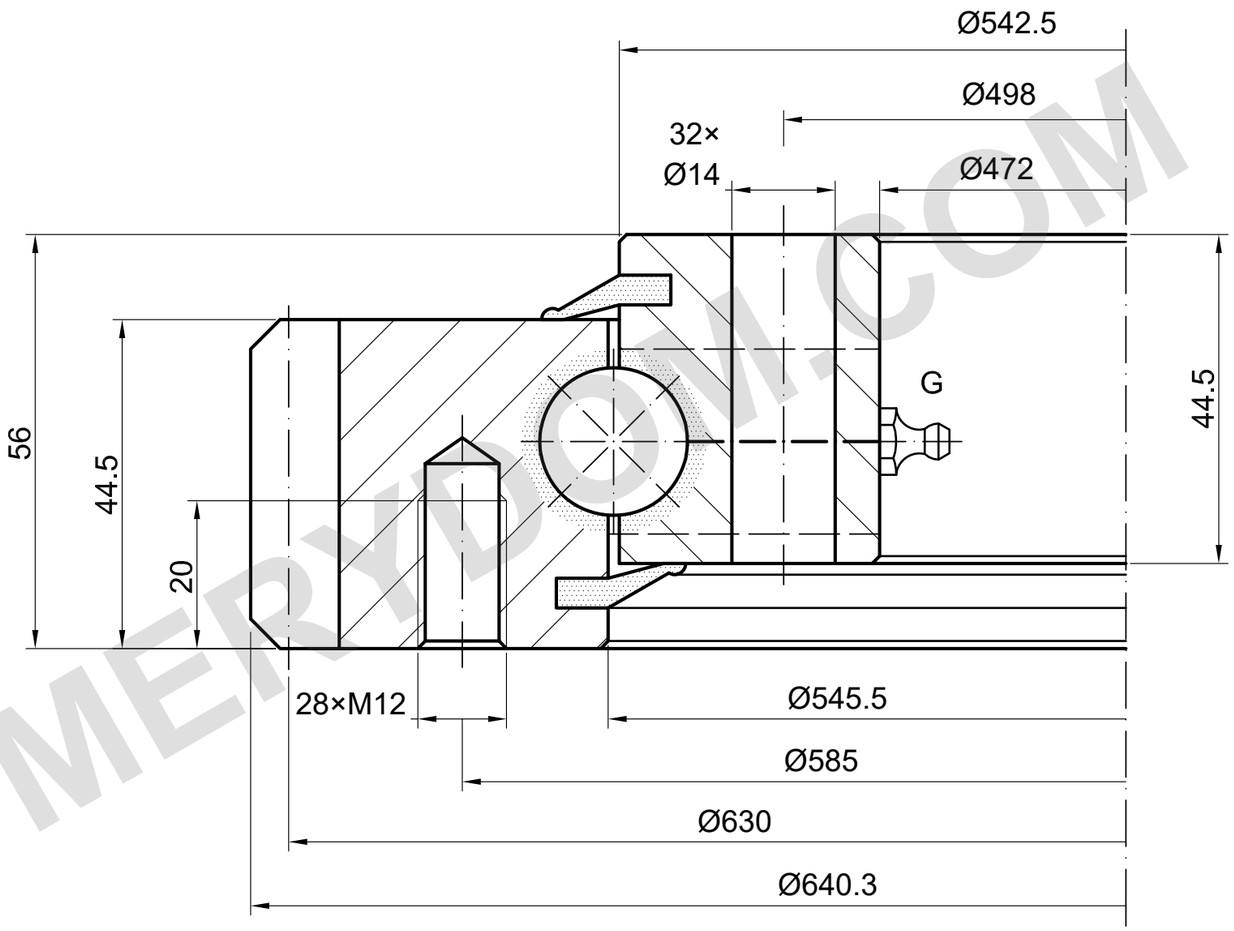

LOAD CAPACITY

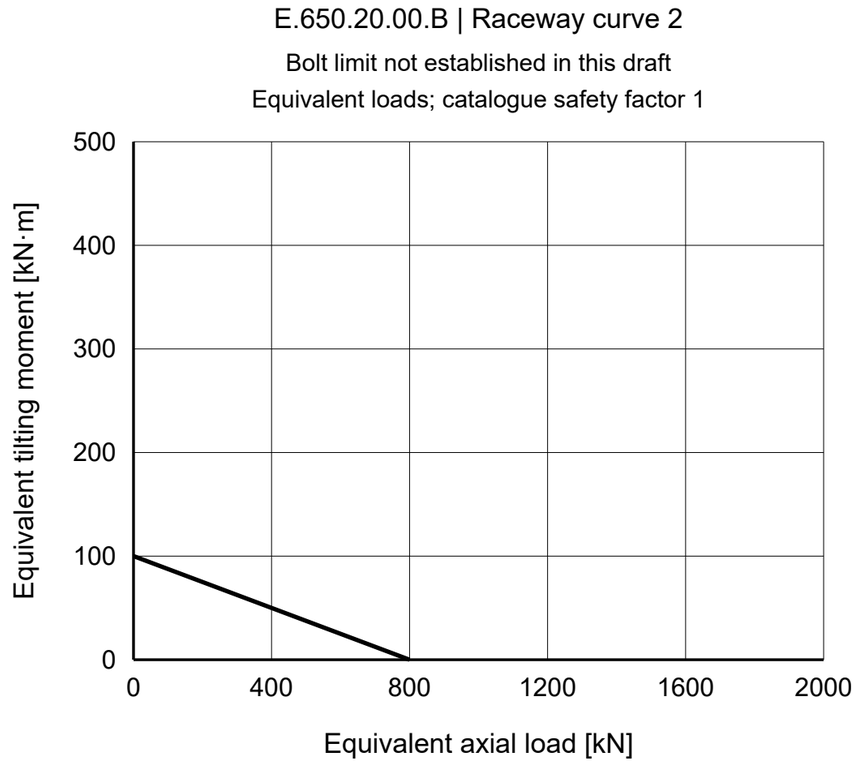

28 × M12 / Ø585 | 32 × Ø14 / Ø498

m 6 | z 105 | 20° | 4 × M8×1

REFERENCE NOTES

Dimensions in mm. Reference drawing; do not scale.

Source: TGB ED.7 (2021); dimensions p15; load chart p15, 2.

Mounting details and positions require confirmation.

TGB E.650.20.00.B — Product page | MERYDOM

MERYDOM
Single-row ball slewing bearing
E.650.20.00.B
REFERENCE: TGB / E.20.B
REFERENCE | NTS | mm | Sheet 1/1

MERYDOM.COM