BEARING SECTION

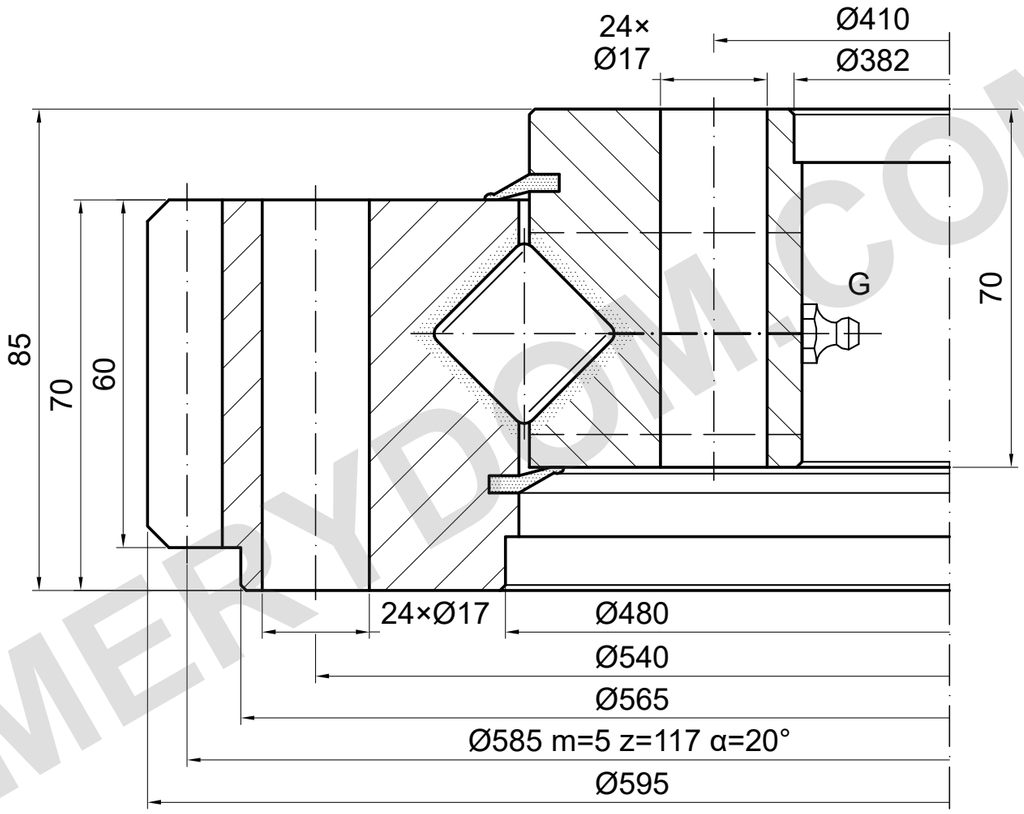

LOAD CAPACITY

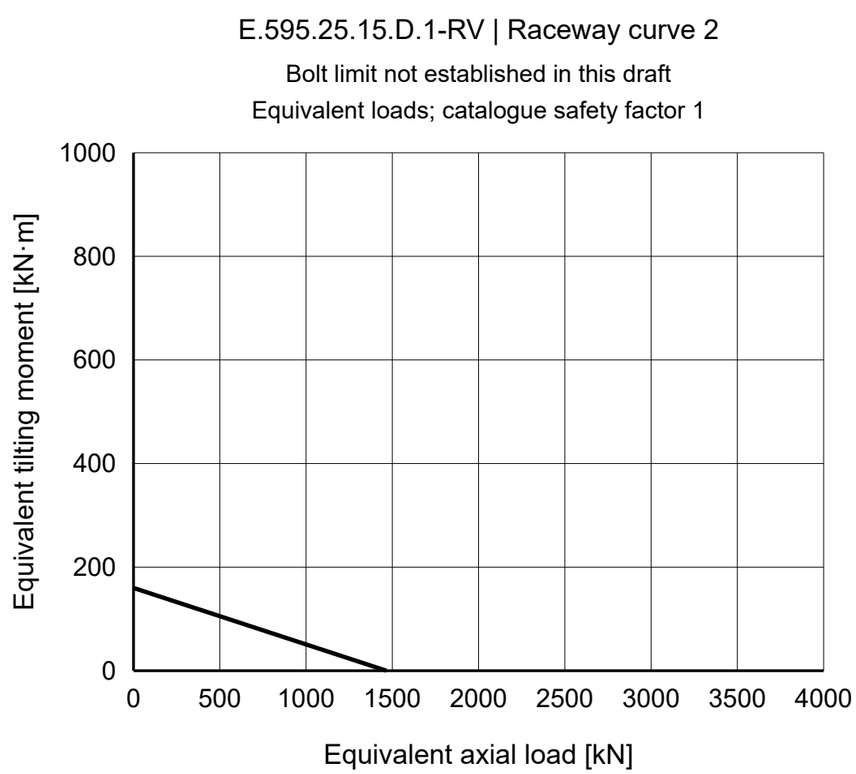

REFERENCE NOTES

Dimensions in mm. Reference drawing; do not scale.

Source: TGB ED.7 (2021); dimensions p19; load chart p19, 2.

Mounting positions and G details require confirmation.

TGB E.595.25.15.D.1-RV — Product page | MERYDOM

MERYDOM
Crossed-roller slewing bearing
E.595.25.15.D.1-RV
REFERENCE: TGB / E.16-25.D-R
REFERENCE | NTS | mm | Sheet 1/1

MERYDOM.COM