BEARING SECTION

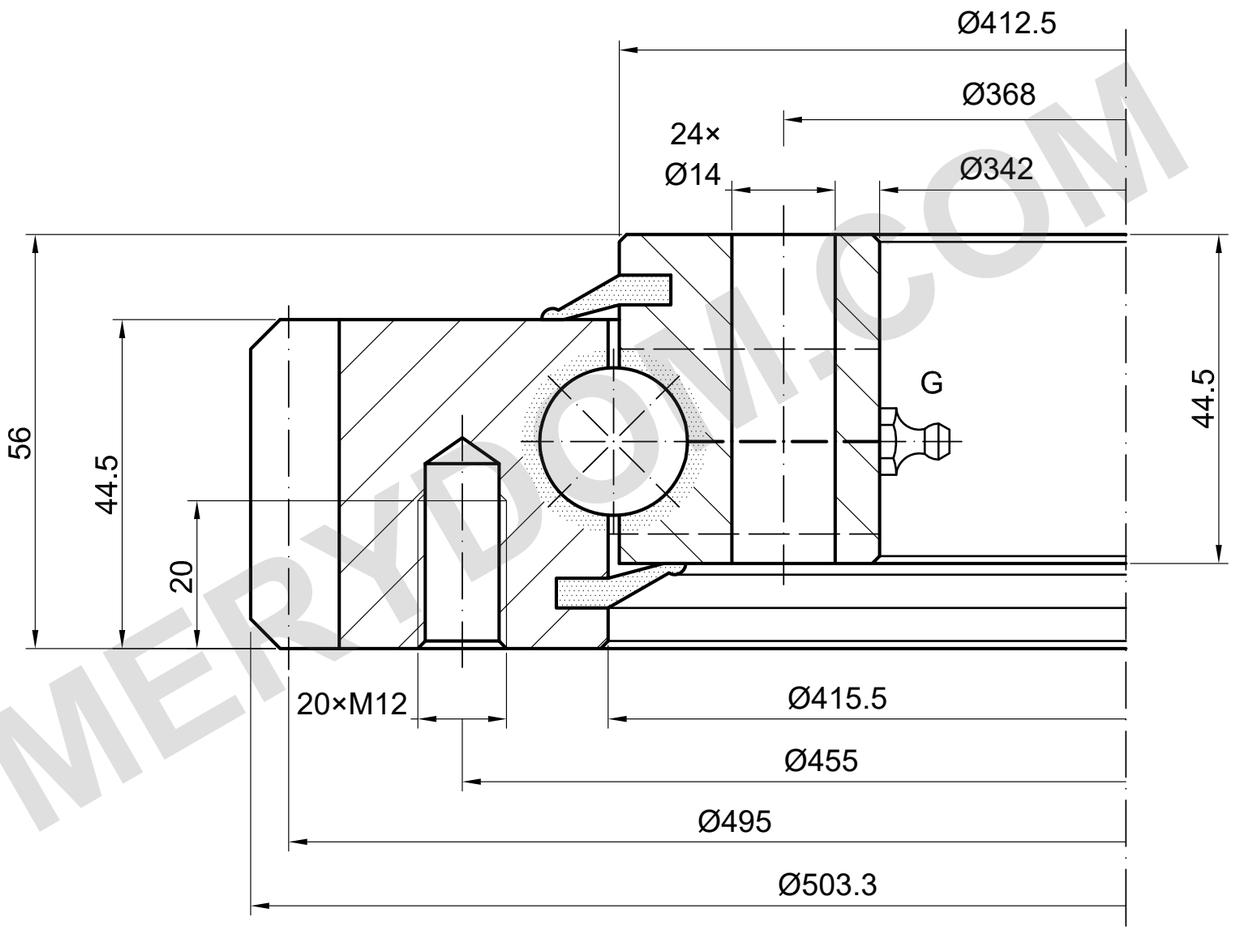

LOAD CAPACITY

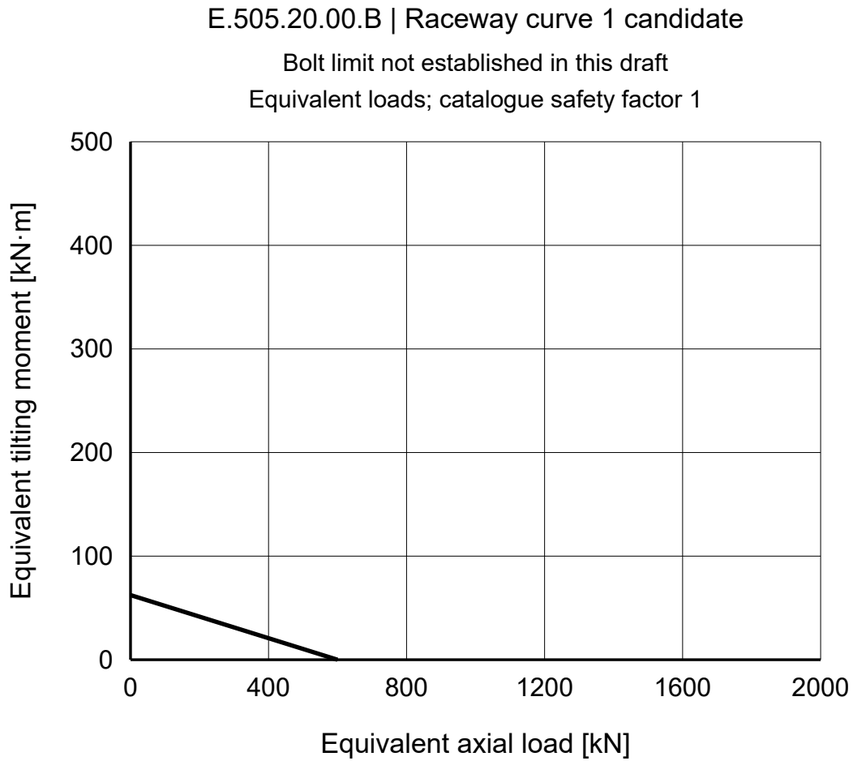

Outer: 20 × M12 / Ø455; inner: 24 × Ø14 / Ø368

Gear: module 5, 99 teeth, 20°; grease: 4 × M8×1

REFERENCE NOTES

Dimensions in mm. Reference drawing; do not scale.

Source: TGB ED.7 (2021); dimensions p15; load chart p15, 1.

Mounting details and positions require confirmation.

TGB E.505.20.00.B — Product page | MERYDOM

MERYDOM
Single-row ball slewing bearing
E.505.20.00.B
REFERENCE: TGB / E.20.B
REFERENCE | NTS | mm | Sheet 1/1

MERYDOM.COM