BEARING SECTION

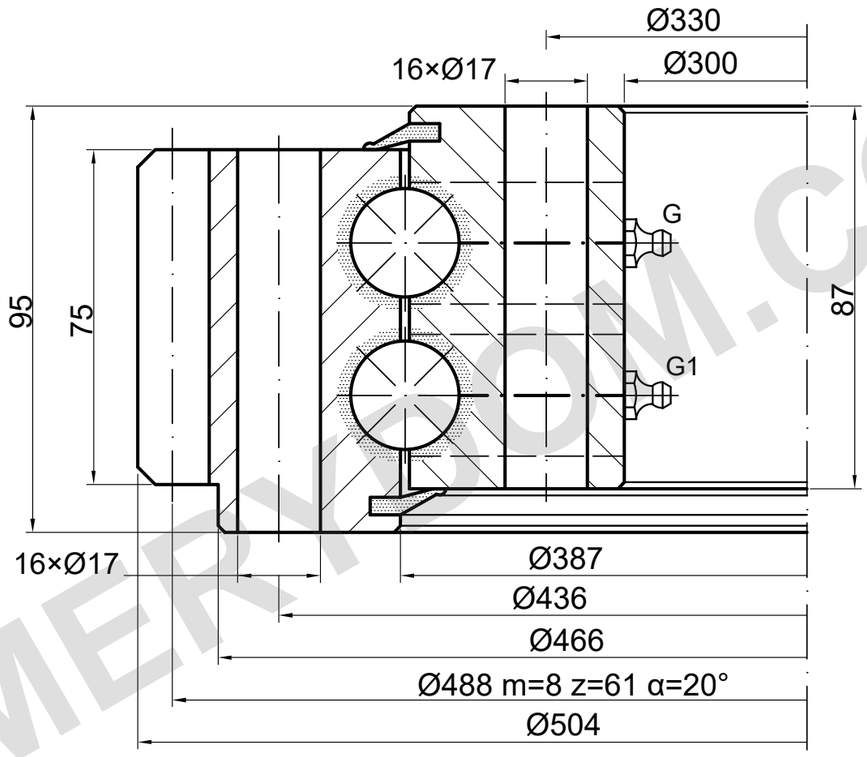

Lubrication points schematic; quantity and location to confirm.

LOAD CAPACITY

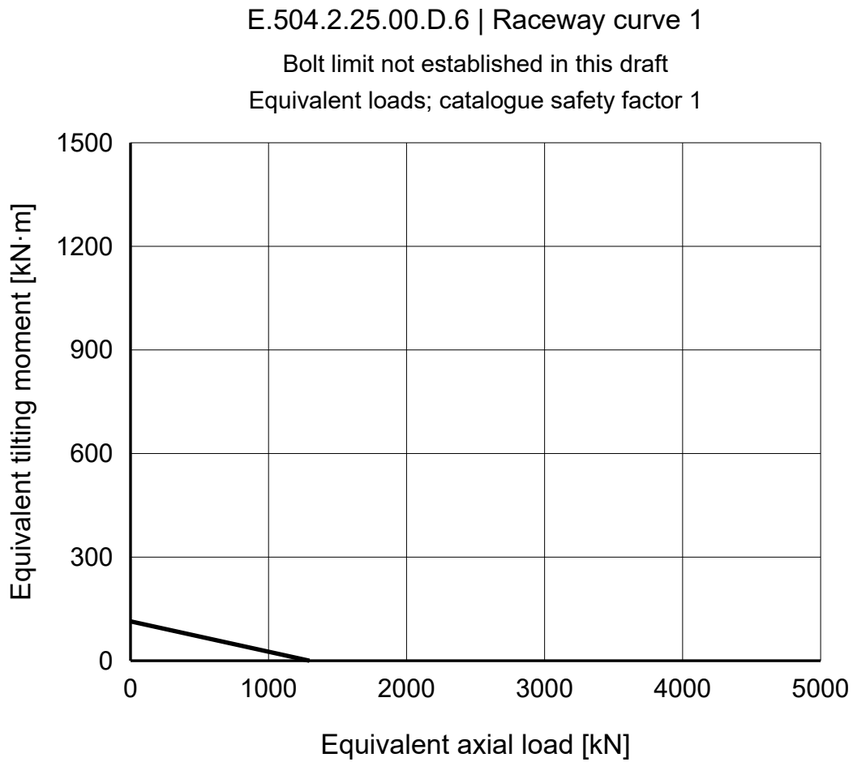

REFERENCE NOTES

Dimensions in mm. Reference drawing; do not scale.

Source: TGB ED.7 (2021); dimensions p19; load chart p19, 1.

Mounting details and positions require confirmation.

TGB E.504.2.25.00.D.6 — Product page | MERYDOM

MERYDOM
Double-row ball slewing bearing
E.504.2.25.00.D.6
REFERENCE: TGB / E.2.20-22-25.D
REFERENCE | NTS | mm | Sheet 1/1

MERYDOM.COM