BEARING SECTION

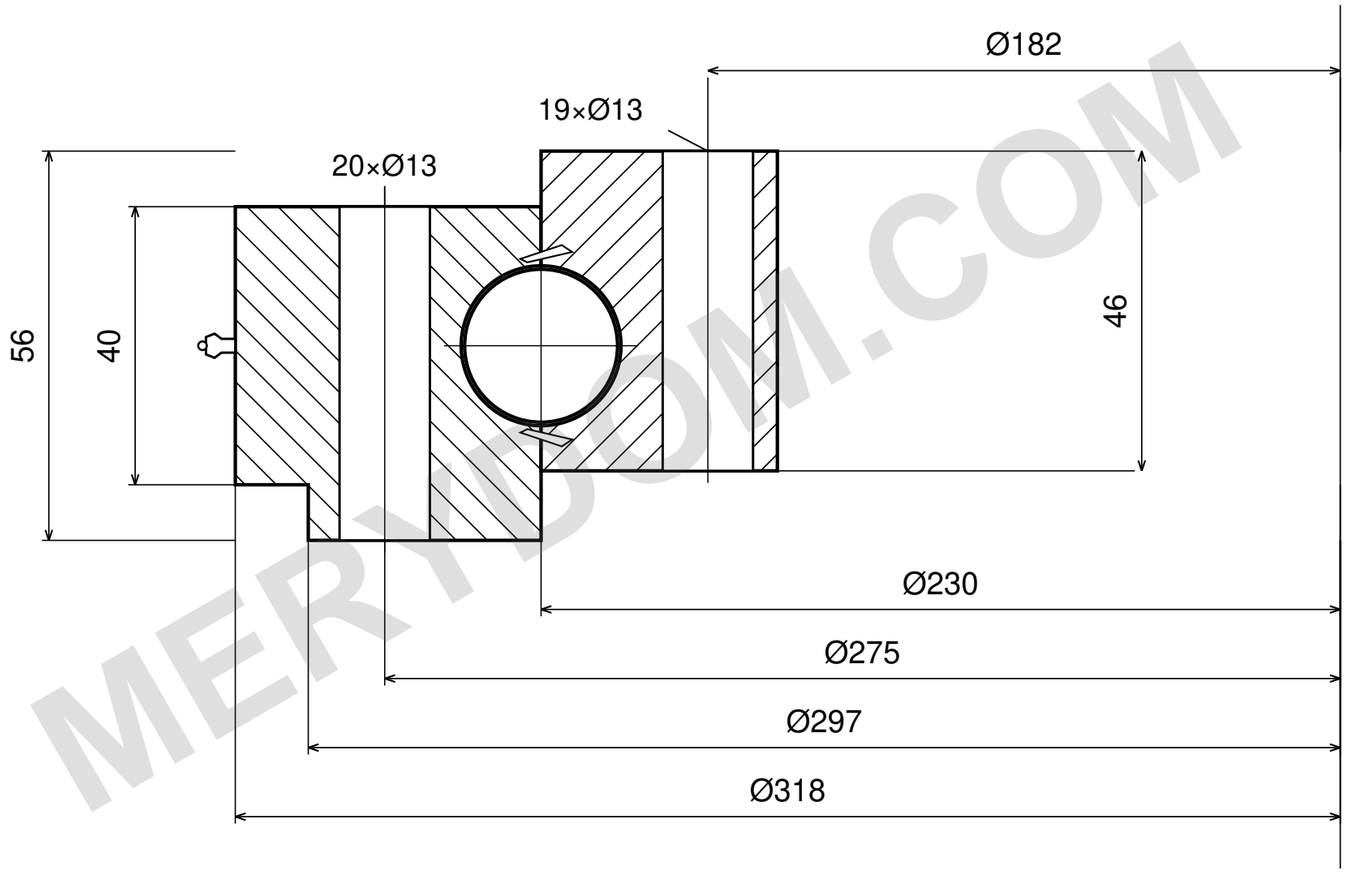

LOAD CAPACITY

MODEL LOAD CURVE UNCONFIRMED

Do not use an unassigned catalogue line.

Confirm capacity and operating conditions

with the applicable order drawing.

REFERENCE NOTES

Dimensions in mm. Reference drawing; do not scale.

Source: TGB ED.7 (2021); dimensions p17.

SCHEMATIC: bore, gear edition and hole phase require order confirmation.

TGB E.318.22.00.D.1 — Product page | MERYDOM

TGB ED.7 catalogue reference. Confirm actual dimensions and mounting holes against the order drawing.

MERYDOM
Single-row ball slewing bearing
E.318.22.00.D.1
REFERENCE: TGB / E.22.D
REFERENCE | NTS | mm | Sheet 1/1

MERYDOM.COM