BEARING SECTION

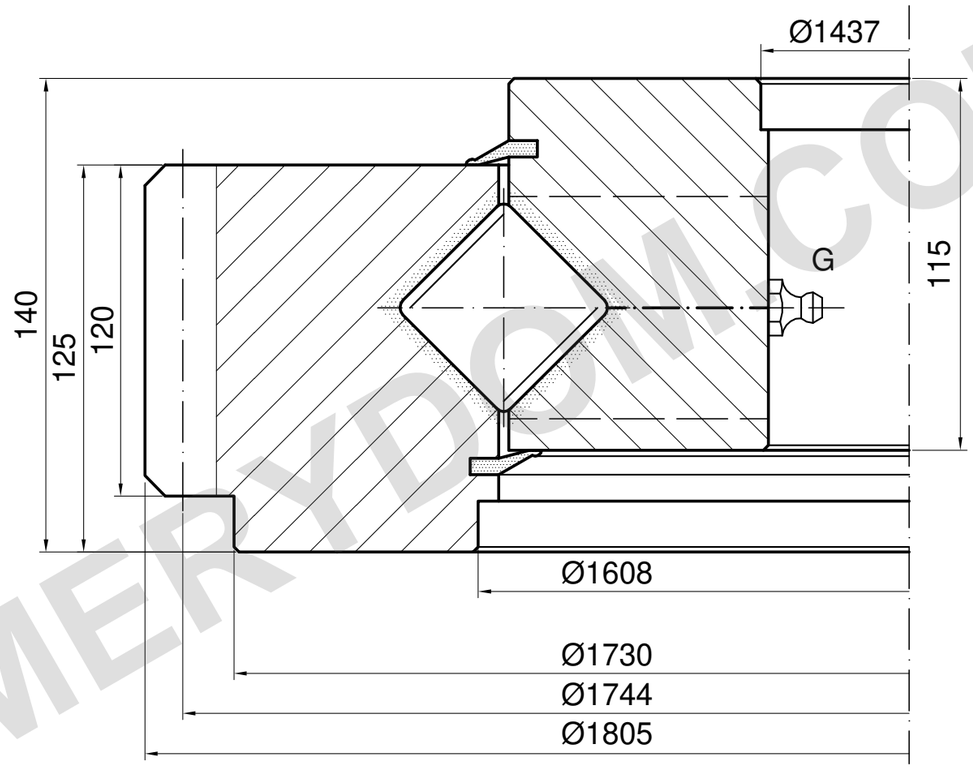

m=16 z=109 α=20°

LOAD CAPACITY

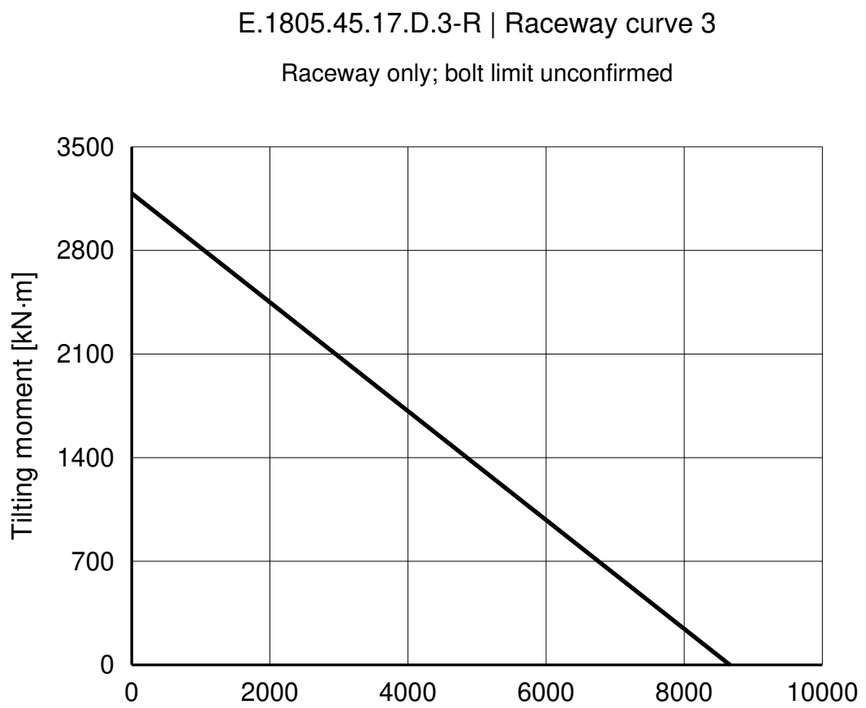

REFERENCE NOTES

Dimensions in mm. Reference drawing; do not scale.

Source: TGB ED.7 (2021); dimensions p20; load chart p20, 3.

uncertain mounting-hole profiles omitted; confirm order drawing.

TGB E.1805.45.17.D.3-R — Product page | MERYDOM

TGB ED.7 catalogue reference. Confirm actual dimensions and mounting holes against the order drawing.

MERYDOM
Crossed-roller slewing bearing
E.1805.45.17.D.3-R
REFERENCE: TGB / E.40-45.D-R
REFERENCE | NTS | mm | Sheet 1/1

MERYDOM.COM