BEARING SECTION

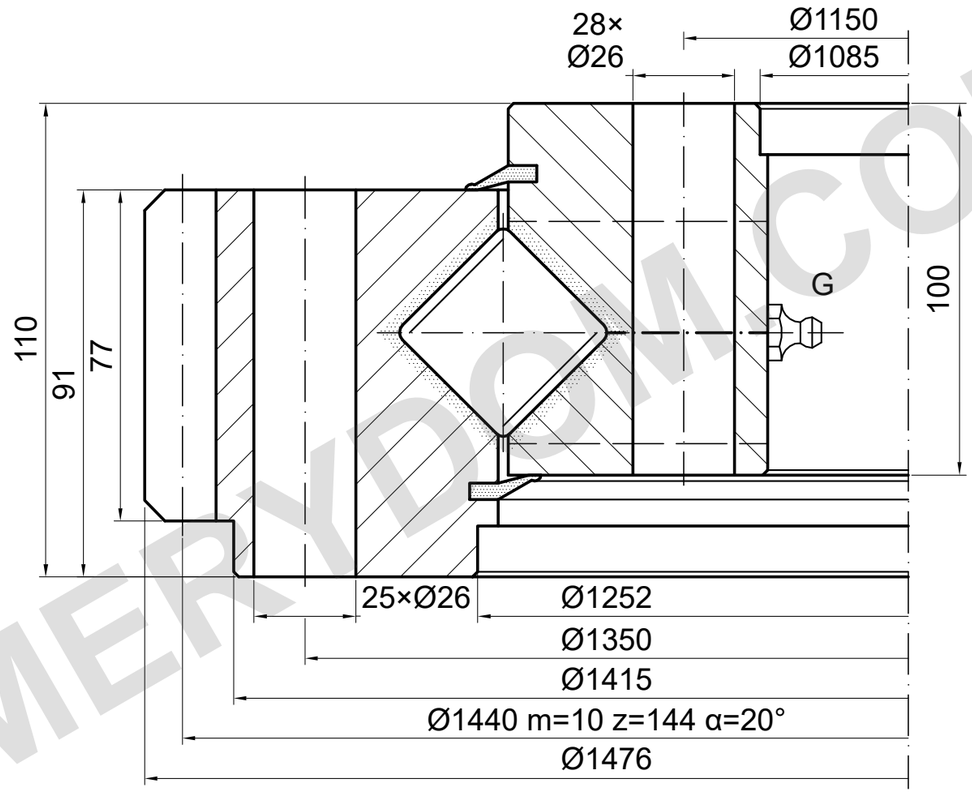

LOAD CAPACITY

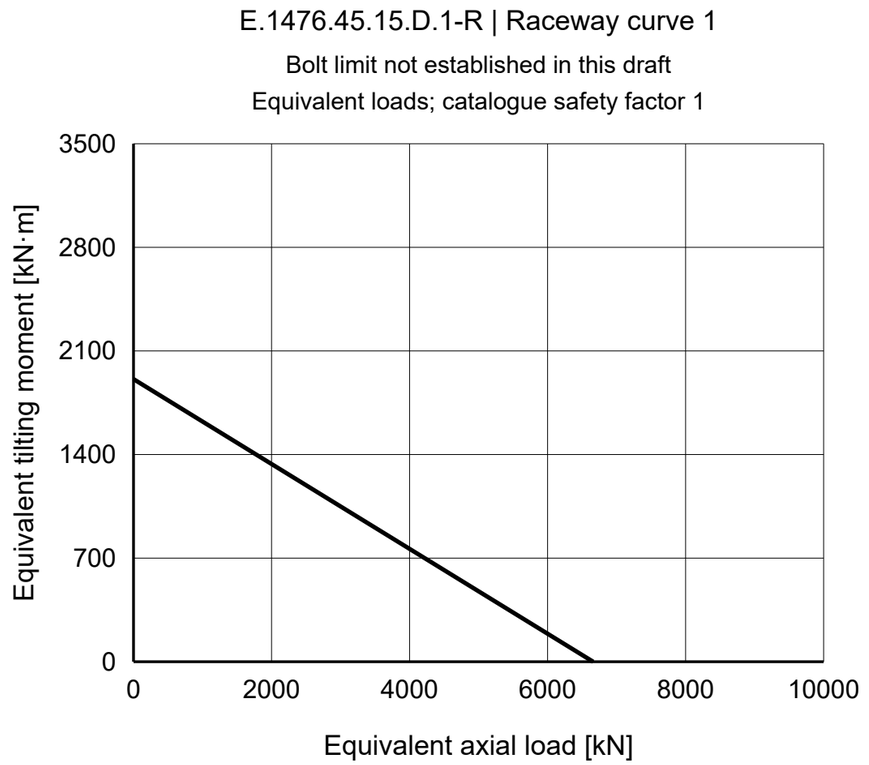

REFERENCE NOTES

Dimensions in mm. Reference drawing; do not scale.

Source: TGB ED.7 (2021); dimensions p20; load chart p20, 1.

Mounting positions and G details require confirmation.

TGB E.1476.45.15.D.1-R — Product page | MERYDOM

MERYDOM
Crossed-roller slewing bearing
E.1476.45.15.D.1-R
REFERENCE: TGB / E.40-45.D-R
REFERENCE | NTS | mm | Sheet 1/1

MERYDOM.COM