BEARING SECTION

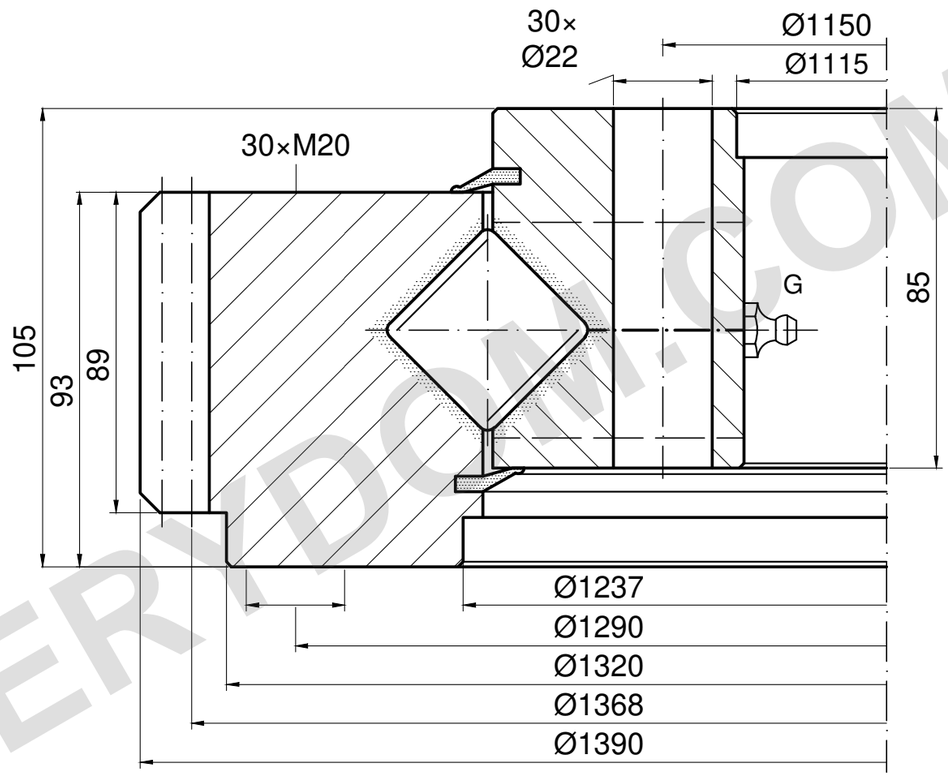

m=12 z=114 α=20°

LOAD CAPACITY

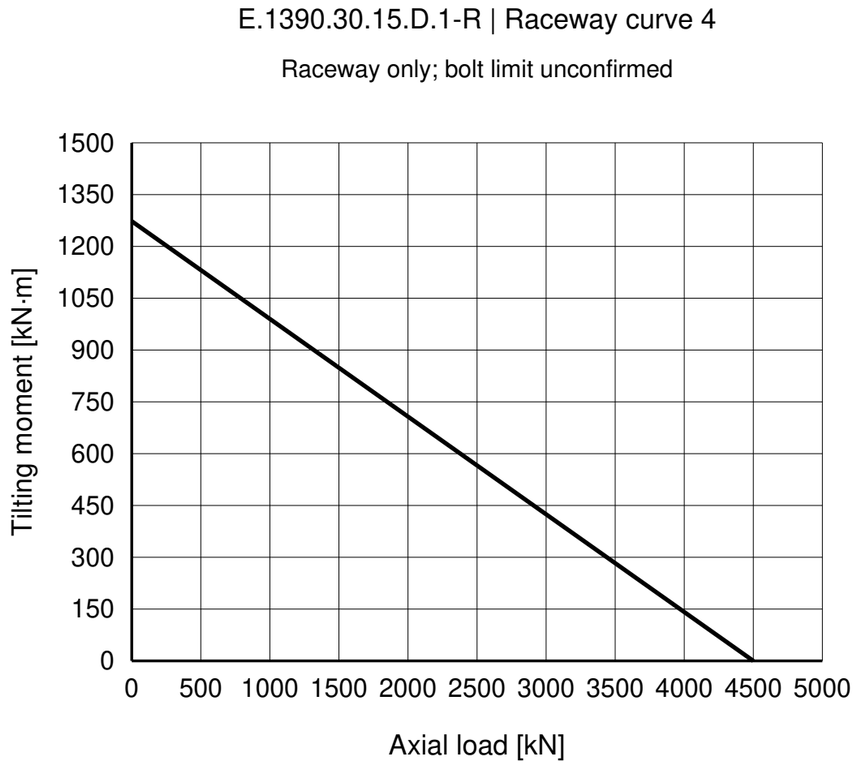

REFERENCE NOTES

Dimensions in mm. Reference drawing; do not scale.

Source: TGB ED.7 (2021); dimensions p20; load chart p20, 4.

outer M20 profile omitted; hole type and opening require order confirmation.

TGB E.1390.30.15.D.1-R — Product page | MERYDOM

TGB ED.7 catalogue reference. Confirm actual dimensions and mounting holes against the order drawing.

MERYDOM
Crossed-roller slewing bearing
E.1390.30.15.D.1-R
REFERENCE: TGB / E.30.D-R
REFERENCE | NTS | mm | Sheet 1/1

MERYDOM.COM