BEARING SECTION

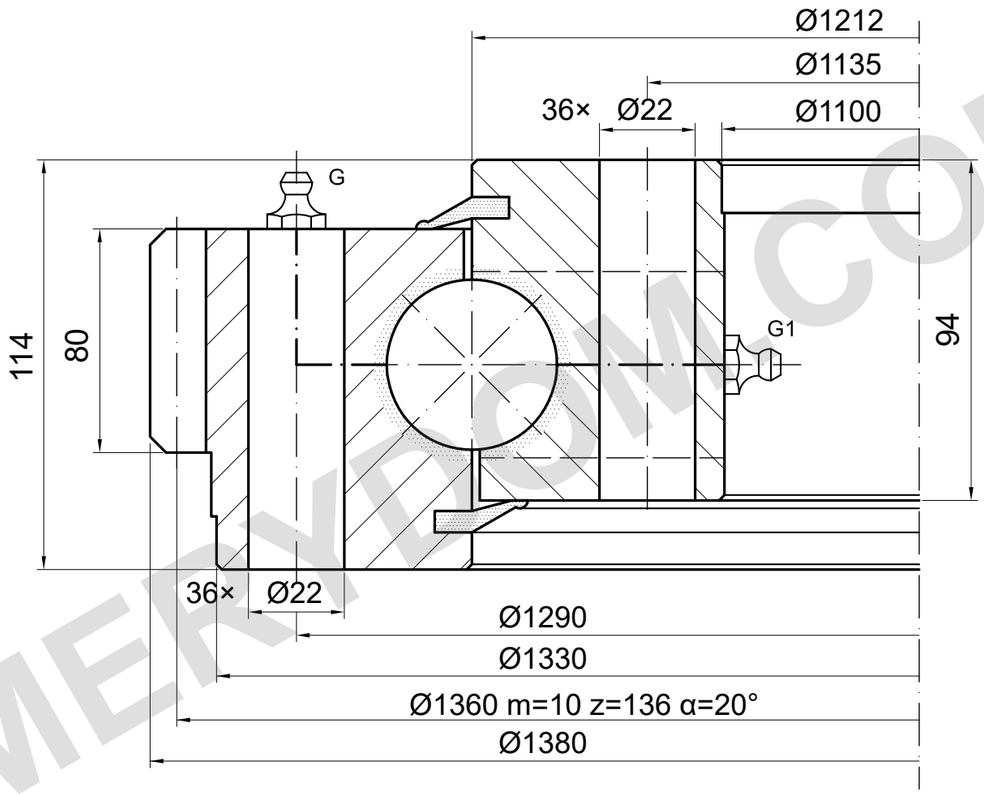

LOAD CAPACITY

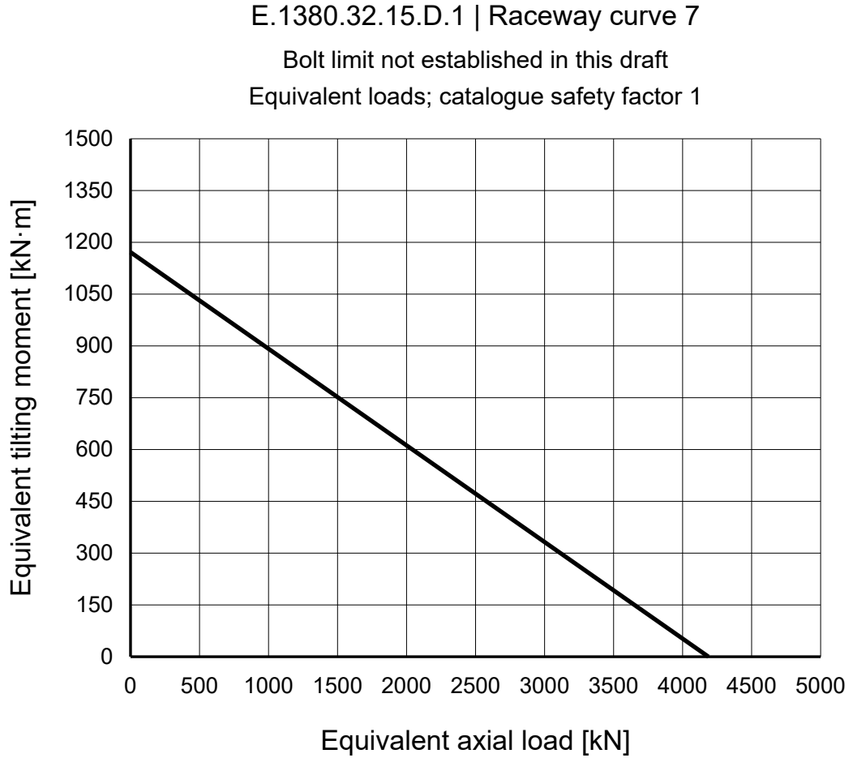

REFERENCE NOTES

Dimensions in mm. Reference drawing; do not scale.

Source: TGB ED.7 (2021); dimensions p18; load chart p18, 7.

Mounting and lubrication details require confirmation.

TGB E.1380.32.15.D.1 — Product page | MERYDOM

MERYDOM
Single-row ball slewing bearing
E.1380.32.15.D.1
REFERENCE: TGB / E.32.D
REFERENCE | NTS | mm | Sheet 1/1

MERYDOM.COM