BEARING SECTION

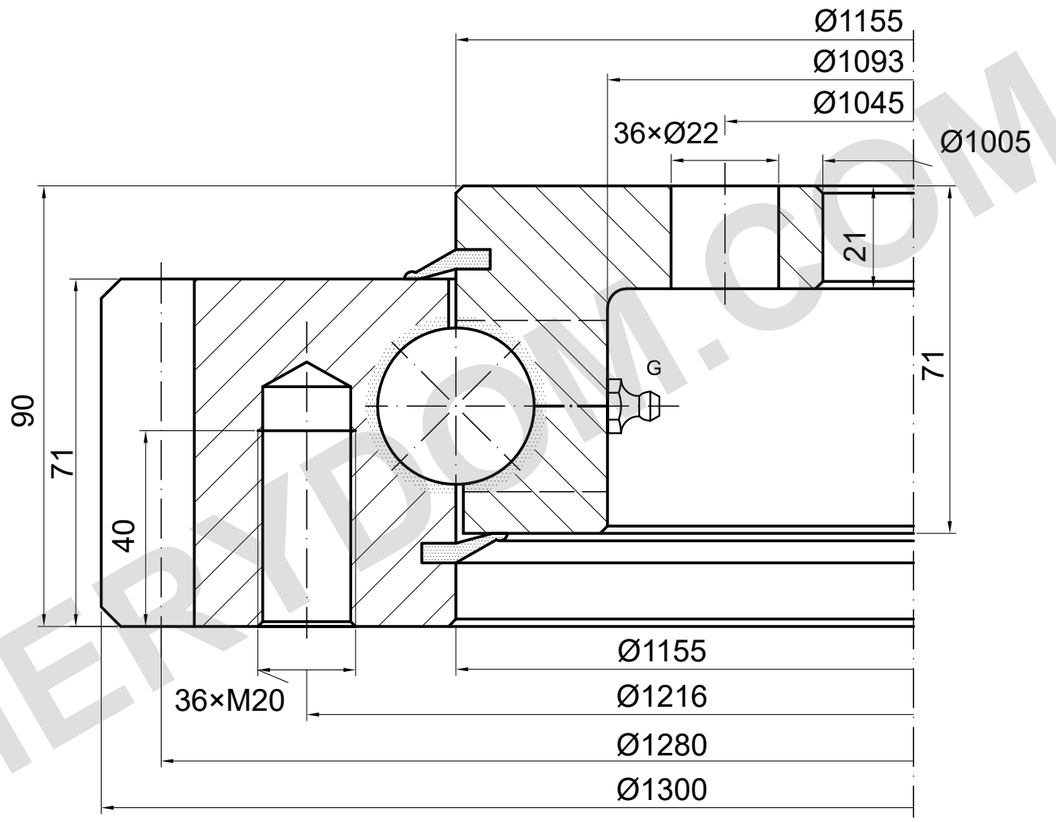

m=10 z=128 α=20°

LOAD CAPACITY

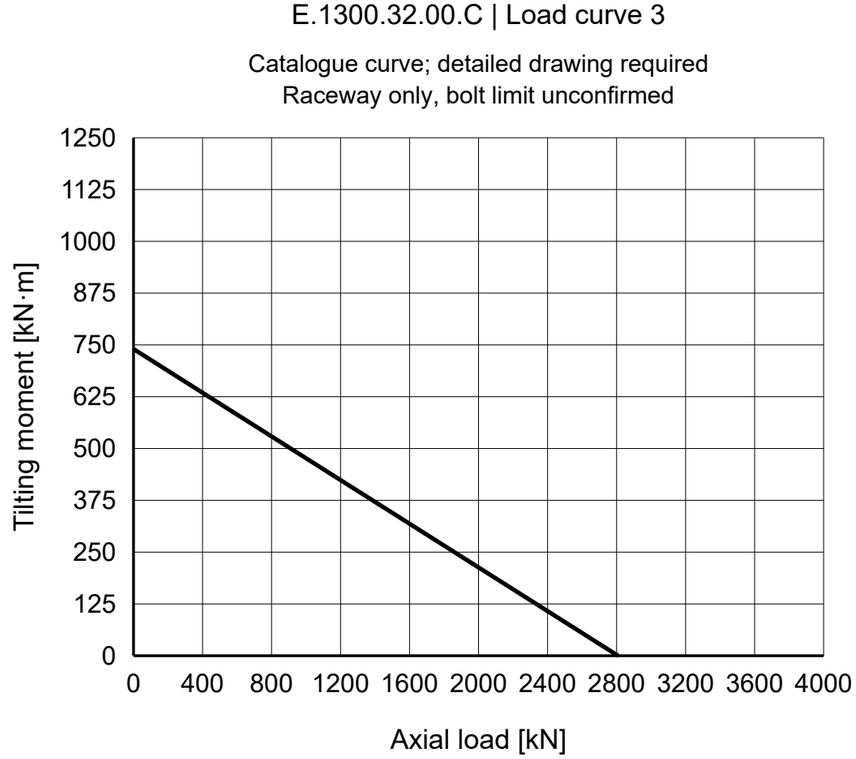

REFERENCE NOTES

Dimensions in mm. Reference drawing; do not scale.

Source: TGB ED.7 (2021); dimensions p17; load chart p17, 3.

Hole positions, thread depth and lubrication require confirmation.

TGB E.1300.32.00.C — Product page | MERYDOM

MERYDOM
Single-row ball slewing bearing
E.1300.32.00.C
REFERENCE: TGB / E.32.C
REFERENCE | NTS | mm | Sheet 1/1

MERYDOM.COM