BEARING SECTION

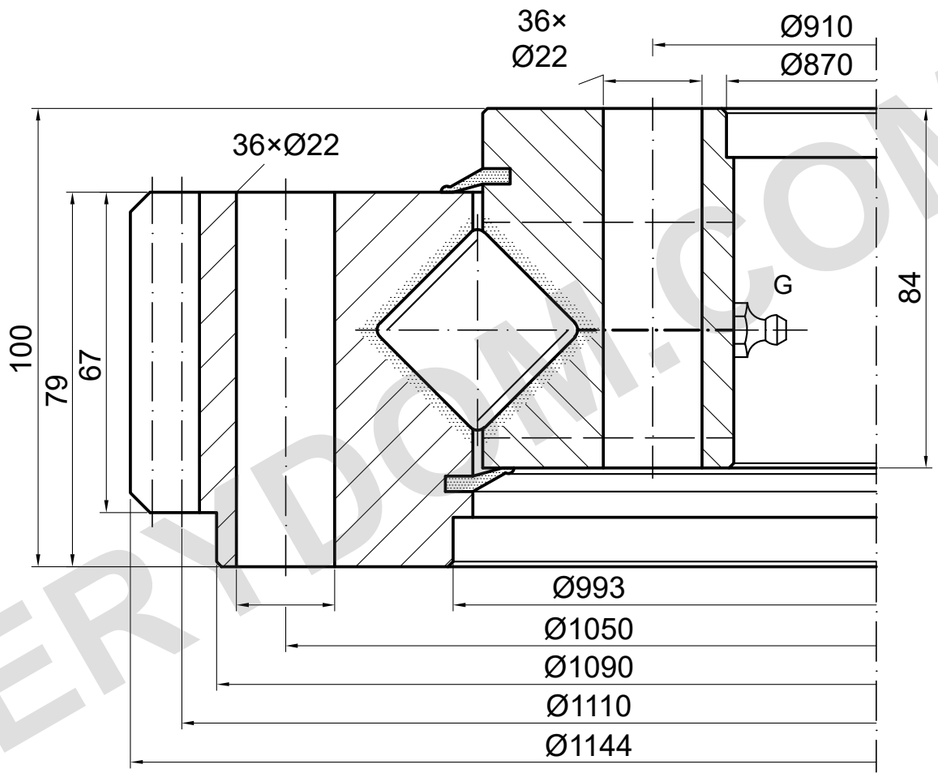

m=10 z=111 α=20°

LOAD CAPACITY

E.1144.30.12.D.1-RV | Load curve 3

Catalogue curve; detailed drawing required

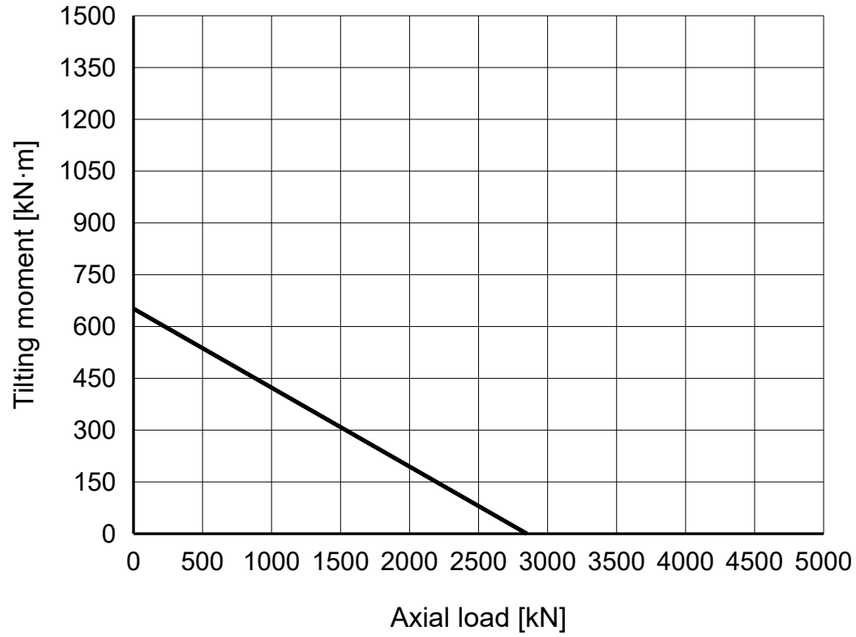

REFERENCE NOTES

Dimensions in mm. Reference drawing; do not scale.

Source: TGB ED.7 (2021); dimensions p20; load chart p20, 3.

Mounting positions and lubrication details require confirmation.

TGB E.1144.30.12.D.1-RV — Product page | MERYDOM

MERYDOM
Crossed-roller slewing bearing
E.1144.30.12.D.1-RV
REFERENCE: TGB / E.30.D-R
REFERENCE | NTS | mm | Sheet 1/1

MERYDOM.COM