BEARING SECTION

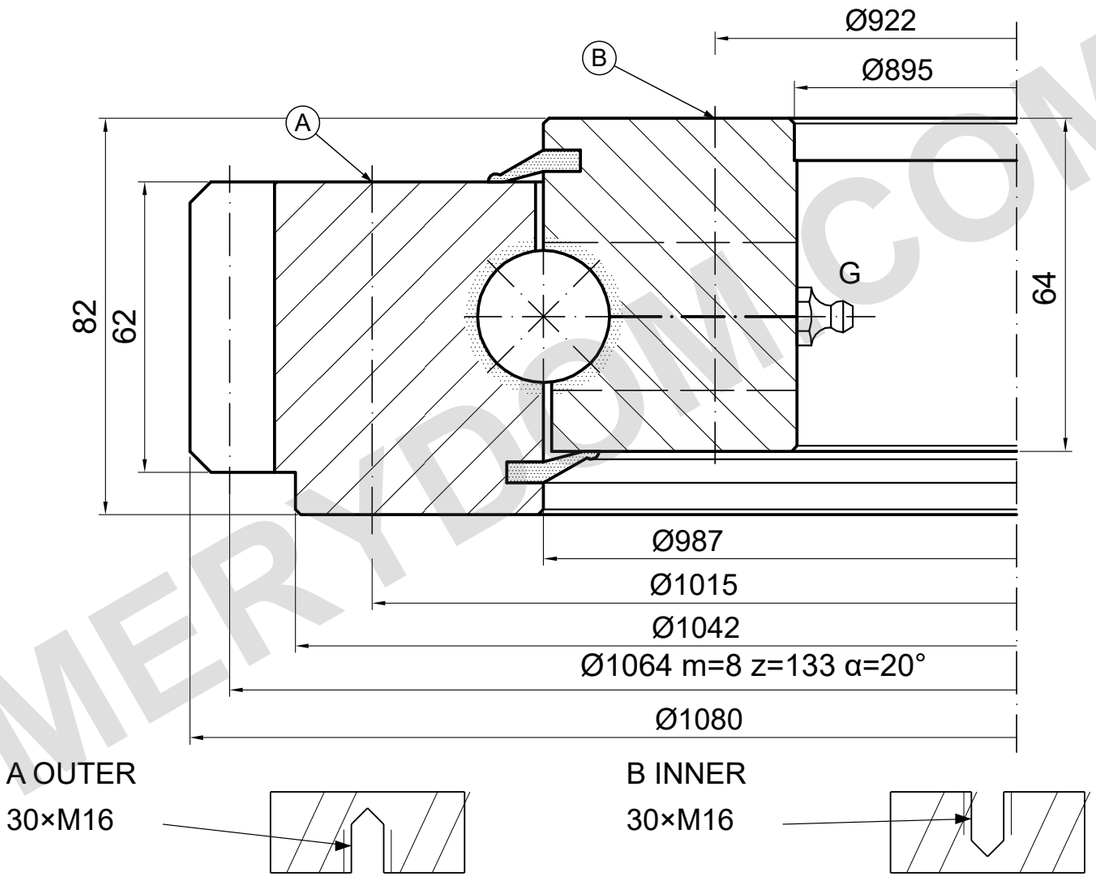

LOAD CAPACITY

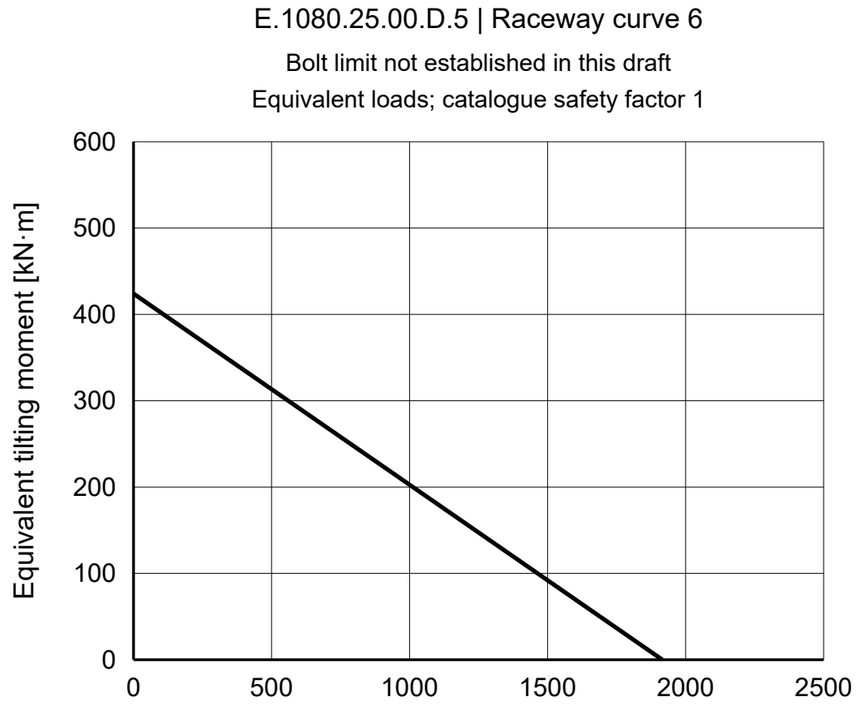

REFERENCE NOTES

Dimensions in mm. Reference drawing; do not scale.

Source: TGB ED.7 (2021); dimensions p18; load chart p18, 6.

A/B schematic; opening faces and drill/thread depths unknown; hole positions unconfirmed.

TGB E.1080.25.00.D.5 — Product page | MERYDOM

MERYDOM
Single-row ball slewing bearing
E.1080.25.00.D.5
REFERENCE: TGB / E.25.D
REFERENCE | NTS | mm | Sheet 1/1

MERYDOM.COM