BEARING SECTION

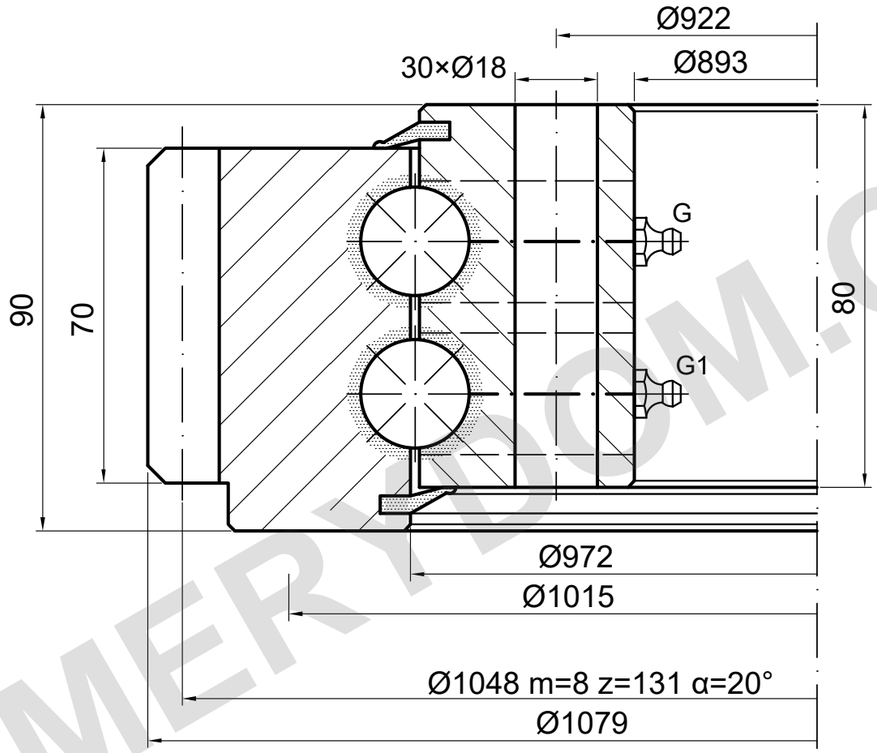

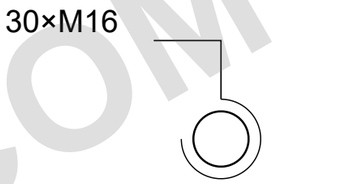

Outer ring · schematic

Lubrication points schematic; quantity and location to confirm.

M16 opening side and depths: confirm against order drawing.

LOAD CAPACITY

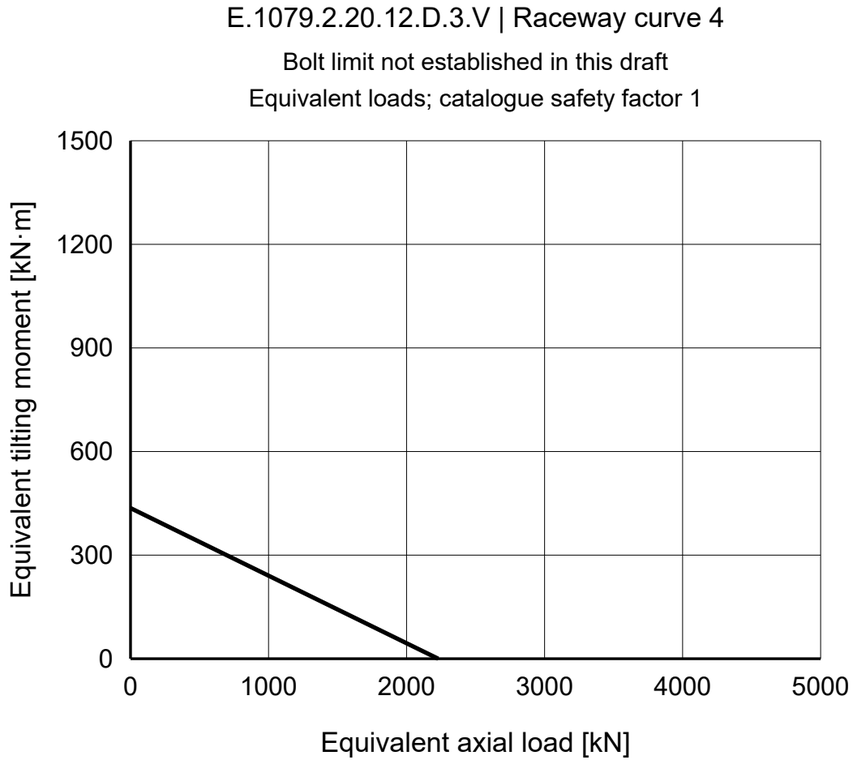

REFERENCE NOTES

Dimensions in mm. Reference drawing; do not scale.

Source: TGB ED.7 (2021); dimensions p19; load chart p19, 4.

Mounting details and positions require confirmation.

TGB E.1079.2.20.12.D.3.V — Product page | MERYDOM

MERYDOM
Double-row ball slewing bearing
E.1079.2.20.12.D.3.V
REFERENCE: TGB / E.2.20-22-25.D
REFERENCE | NTS | mm | Sheet 1/1

MERYDOM.COM