BEARING SECTION

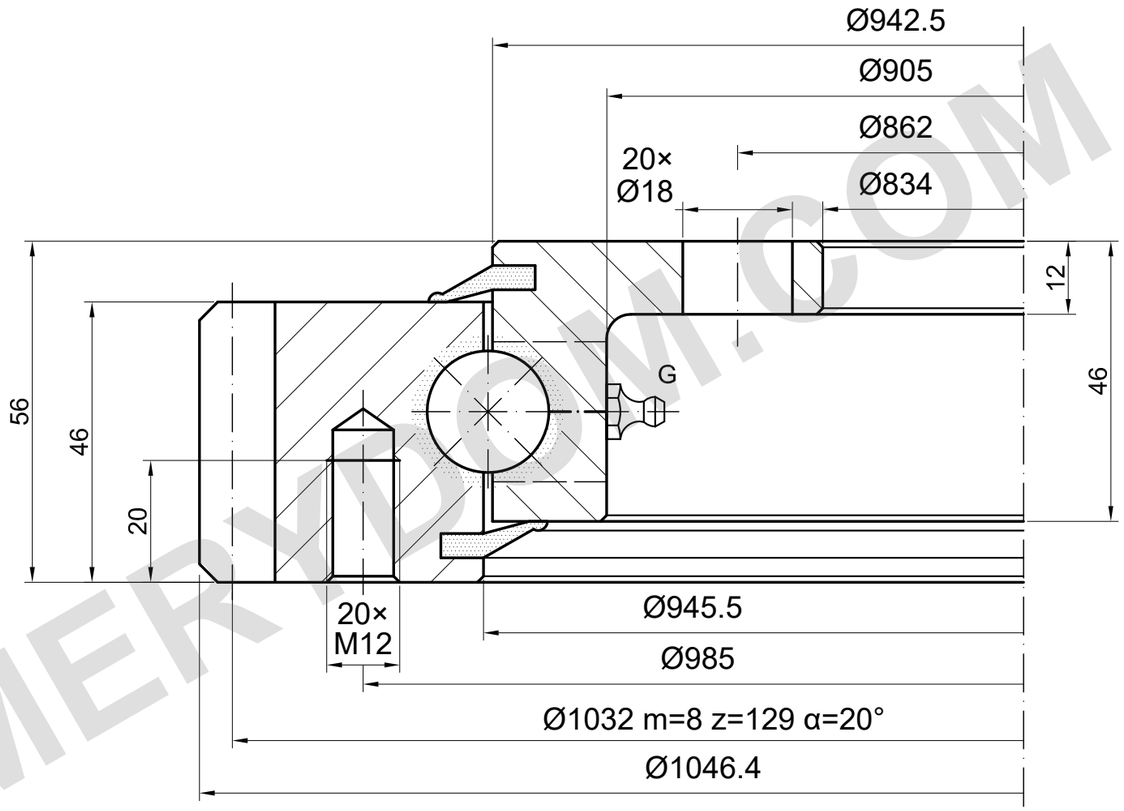

LOAD CAPACITY

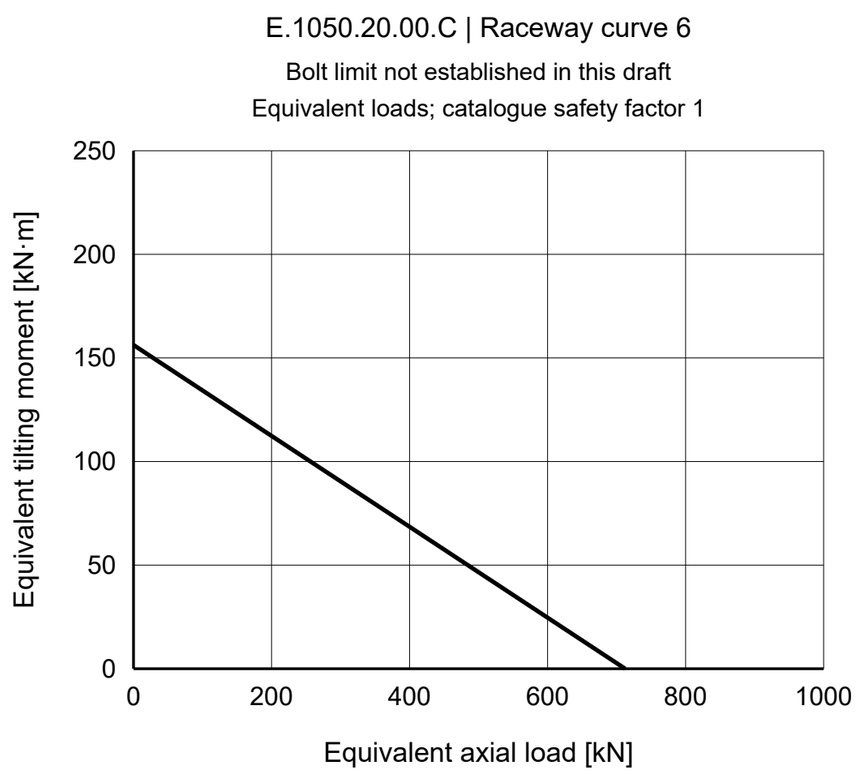

REFERENCE NOTES

Dimensions in mm. Reference drawing; do not scale.

Source: TGB ED.7 (2021); dimensions p16; load chart p16, 6.

Hole positions and blind/thread depths unconfirmed; G: 4×M8×1 (series note).

TGB E.1050.20.00.C — Product page | MERYDOM

MERYDOM
Single-row ball slewing bearing
E.1050.20.00.C
REFERENCE: TGB / E.20.C
REFERENCE | NTS | mm | Sheet 1/1

MERYDOM.COM